COMMUNITY AND ECONOMIC DEVELOPMENT DEPARTMENT

CASE NO.: RCU2018-00027

CASE NAME: PIVOT-KAMERRA SOLAR

TABLE OF CONTENTS

EXHIBIT 1 – BoCC Staff Report

EXHIBIT 2- Maps
- 2.1 Aerial Map
- 2.2 Zoning Map
- 2.3 Future Land Use Map

EXHIBIT 3- Applicant Information
- 3.1 Applicant Written Explanation
- 3.2 Applicant Site Plan

EXHIBIT 4- Referral Comments
- 4.1 Referral Comments (Adams County)
- 4.2 Referral Comments (TCHD)
- 4.3 Referral Comments (Xcel)

EXHIBIT 5- Citizen Comments
- None

EXHIBIT 6- Associated Case Materials
- 6.1 Request for Comments
- 6.2 Public Hearing Notice
- 6.3 Newspaper Publication
- 6.4 Referral Agency Labels
- 6.5 Property Owner Labels
- 6.6 Certificate of Posting

COMMUNITY AND ECONOMIC DEVELOPMENT DEPARTMENT STAFF REPORT

Board of County Commissioners May 21, 2019

CASE No.: **RCU2018-00027**	CASE NAME: **Pivot-Kamerra Solar**

Owner's Name:	Kamerra, LLC
Applicant's Name:	Microgrid Energy (Jon Fitzpatrick)
Applicant's Address:	1536 Wynkoop St., #400, Denver, CO 80202
Location of Request:	Approximately 500 feet northwest of the intersection of E. 48th Ave. and Imboden Rd.
Nature of Request:	A conditional use permit to allow a solar energy facility
Zone Districts:	Agriculture-2 (A-2) with zoning overlays
Comprehensive Plan:	Estate Residential
Site Size:	23 acres
Proposed Uses:	Solar Energy Facility
Existing Use:	Vacant
Hearing Date(s):	**PC: April 25, 2019 / 6:00 p.m.** **BOCC: May 14, 2019 /9:30 a.m.**
Report Date:	April 14, 2019
Case Manager:	Greg Barnes
PC/Staff Recommendation:	APPROVAL with 8 Findings-of-Fact, 8 Conditions, and 2 Notes

SUMMARY OF APPLICATION

Background

Pivot Energy, the applicant, is requesting a conditional use permit (CUP) to allow a solar garden facility on the subject property. The proposed solar garden facility is proposed in partnership with Xcel Energy and is necessary to meet the demands of the State of Colorado's Renewable Portfolio Standard. Enacted by ballot-initiative in 2004, Colorado requires electricity providers to obtain a minimum percentage of their power from renewable energy sources. A 22-year approval

is being requested to allow the facility to be located on the site for twenty years, with additional years for construction and disassembly of the site.

The proposed solar garden facility would occupy approximately 23 acres. The site plan shows the solar panels are proposed to be arranged in rows and will be constructed in four clusters of approximately 12,400 solar panels for the entire project (see Exhibit 3.2). The maximum height of the panels is proposed to be eight (8) feet. There is also a security fence proposed along the perimeter of the facility. No landscaping is proposed with the development of the site.

Site Characteristics:

Currently, the property is largely vacant. A small structure and some stored materials are located on the southern portion of the site. The proposed solar garden facility site would be located on the northern 20 acres of the 23-acre property. East 48th Avenue is located to the south of the site and Imboden Road is to the east. Both streets can provide access to the proposed solar facility.

Development Standards and Regulations Requirements:

The property is designated Agricultural-2 (A-2), which is intended to provide landholdings of 10 acres or greater for very low density residential and moderate farming uses. Per Section 3-07-01 of the Adams County Development Standards and Regulations, a conditional use permit is required for a solar garden facility in the Agriculture-2 (A-2) zone district. Section 2-02-08-06 of the County's Development Standards and Regulations outlines the criteria for approval of a conditional use permit. These include compliance with the County's Development Standards and Regulations; compatibility with the surrounding area, the request must be permitted in the zone district, and must address all off-site impacts. In addition, the proposed use is required to be harmonious with the character of the neighborhood, and must not be detrimental to the immediate area, or to the health, safety, or welfare of the inhabitants of the area and the County.

In addition, Section 4-03-03-02-10 of the County's Development Standards and Regulations outlines performance standards for solar garden facilities. These performance standards regulate height and setbacks for solar panels. Per the standards, the maximum permitted height for solar panels is 15 feet. According to the materials submitted with the application, the proposed solar panels will not exceed eight (8) feet in height. In addition, according to the site plan, the panels will conform to all setback requirements of the A-2 zone district, which include a 50-foot front setback, a 10-foot side setback, and a 20-foot rear setback.

Per Section 4-16-19-01 of the County's Development Standards, landscaping may be required; however, the applicant is requesting to develop the site without landscaping due to the proposed site's distance from roadways and limited availability of water for irrigation. The proposed solar garden facility is located approximately 400 feet from the East 48th Avenue right-of-way and 75 feet away from the Imboden Road right-of-way. The request includes two options for fencing: a wildlife-compatible design consisting of wood and wire or a standard chain-link. Both options are proposed to be eight feet tall, which is consistent with the County's Development Standards and Regulations.

The subject property is located within the Airport Influence Zone (AIZ) overlay district. The purpose of the AIZ district is to prohibit development activity that encourages wildlife and interferes with aviation. Per Section 3-33-05-04 of the County's Development Standards, an aircraft activity covenant is required to be recorded prior to the issuance of building permits for development within the AIZ overlay district. Staff has included a condition of approval to ensure compliance with this requirement.

In addition, the proposed conditional use does not result in excessive traffic generation, noise, vibration, dust, glare, odors, or cause disruption to the surrounding area. Furthermore, the site is suitable for the conditional use, as it has been demonstrated that there is adequate usable space, access, and an absence of environmental constraints.

Future Land Use Designation/Goals of the Comp-Plan for the Area

The Future Land Use Designation on the property is Mixed-Use Employment. Per Chapter 5 of the Adams County Comprehensive Plan, the purpose of the Mixed-Use Employment future land use designation is to accommodate a range of employment uses with a mix of supporting uses to serve employment needs. In addition, Mixed-Used Employment areas are designated in locations that have transportation access and visibility, but are not suitable for residential development. Mixed-Use Employment areas may include offices, light manufacturing, distribution, indoor warehousing, clean industry, and supporting retail businesses. The applicant intends to develop the property with solar energy facilities which will support future commercial development in the area and thus supports the goals of the Comprehensive Plan. Additionally, solar facilities are non-permanent in nature, with their lifespan lasting approximately 20 years; so, while this area is not currently undergoing development, there may be a shift in how this area will be utilized in the future, with more employment-generating uses as envisioned in the Comprehensive Plan.

Surrounding Zoning Designations and Existing Use Activity:

Northwest **A-3** **Solar Garden**	**North** **A-3** **Solar Garden**	**Northeast** **City of Aurora** **Utility Substation**
West **A-3** **Vacant**	**Subject Property** **A-3** **Vacant**	**East** **City of Aurora** **Vacant**
Southwest **A-3** **Vacant**	**South** **A-3** **Residential**	**Southeast** **City of Aurora** **Vacant**

Compatibility with the Surrounding Land Uses:

The properties surrounding the site are developed with similar solar garden facilities along Imboden Road. Properties to the south of the site are developed with single-family residences. The proposed conditional use permit for solar facilities is consistent with the goals of the Comprehensive Plan and compatible with the surrounding area. Any new development on the subject property must comply with all setbacks, landscaping, and screening standards to buffer

adjacent residential uses to the east. A landscape and screening plan would be required with any application for a building permit on the site.

PLANNING COMMISSION UPDATE

The Planning Commission (PC) considered this case on April 25, 2019, and voted (7-0) to recommend approval of the request. The applicant spoke at the meeting and had no concerns with the staff report or presentation. There was no one from the public to speak in favor or in opposition to the request.

Staff Recommendations:

Based upon the application, the criteria for approval of a conditional use permit, and a recent site visit, staff recommends approval of the request with 8 findings-of-fact, 8 conditions, and 1 note.

RECOMMENDED FINDINGS-OF-FACT:

1. The conditional use is permitted in the applicable zone district.
2. The conditional use is consistent with the purposes of these standards and regulations.
3. The conditional use will comply with the requirements of these standards and regulations, including but not limited to, all applicable performance standards.
4. The conditional use is compatible with the surrounding area, harmonious with the character of the neighborhood, not detrimental to the immediate area, not detrimental to the future development of the area, and not detrimental to the health, safety, or welfare of the inhabitants of the area and the County.
5. The conditional use permit has addressed all off-site impacts.
6. The site is suitable for the proposed conditional use including adequate usable space, adequate access, and absence of environmental constraints.
7. The site plan for the proposed conditional use will provide the most convenient and functional use of the lot including the parking scheme, traffic circulation, open space, fencing, screening, landscaping, signage, and lighting.
8. Sewer, water, storm water drainage, fire protection, police protection, and roads are to be available and adequate to serve the needs of the conditional use as designed and proposed.

Recommended Conditions of Approval:

1. This conditional use permit shall expire on May 14, 2041 (22 years).
2. Prior to issuance of a building permit, the applicant shall file an Aircraft Activity Covenant with Disclosure with the Adams County Clerk & Recorder.
3. Prior to issuance of a building permit, the applicant shall provide documentation showing an access easement or agreement for access to the solar facility from the adjoining property.
4. The applicant shall comply with all of the requirements of the Colorado Division of Natural Resources provided in their letter dated July 24, 2018, including surveying the

site for nesting birds, swift foxes, prairie dogs, and burrowing owls if installation of panels occurs between March 15th and July 31st of the year.

5. The applicant shall comply with all of the requirements of the Tri-County Health Department provided in their letter dated July 24, 2018, including the use of portable toilets and trash enclosures during construction.
6. A building permit shall be required for any fence associated with the site.
7. Landscaping is not required with development of the site for a solar garden.
8. The solar panels on-site shall be removed when the conditional use permit expires, unless an extension or renewal is granted by the Board of County Commissioners.

Recommended Notes to the Applicant:

1. This conditional use permit shall expire within one year (May 21, 2020), if a building permit is not obtained for the development.
2. The applicant shall comply with all building, zoning, fire, engineering, and health codes and regulations during the development of the subject site.

PUBLIC COMMENTS

Notifications Sent	Comments Received
15	0

Notices were sent to all property owners and residents within 2,000 feet radius of the site. As of this report, staff has not received any comments on the request.

REFERRAL AGENCY COMMENTS

Responding with Concerns:
None

Responding without Concerns:
Colorado Division of Water Resources
Colorado Geological Survey
Tri-County Health Department
Xcel Energy

Notified but not Responding / Considered a Favorable Response:
Bennett Fire District
Bennett Park and Recreation
Bennett School District 29J
City of Aurora
Century Link
Comcast
Metro Wastewater Reclamation District
United States Post Office

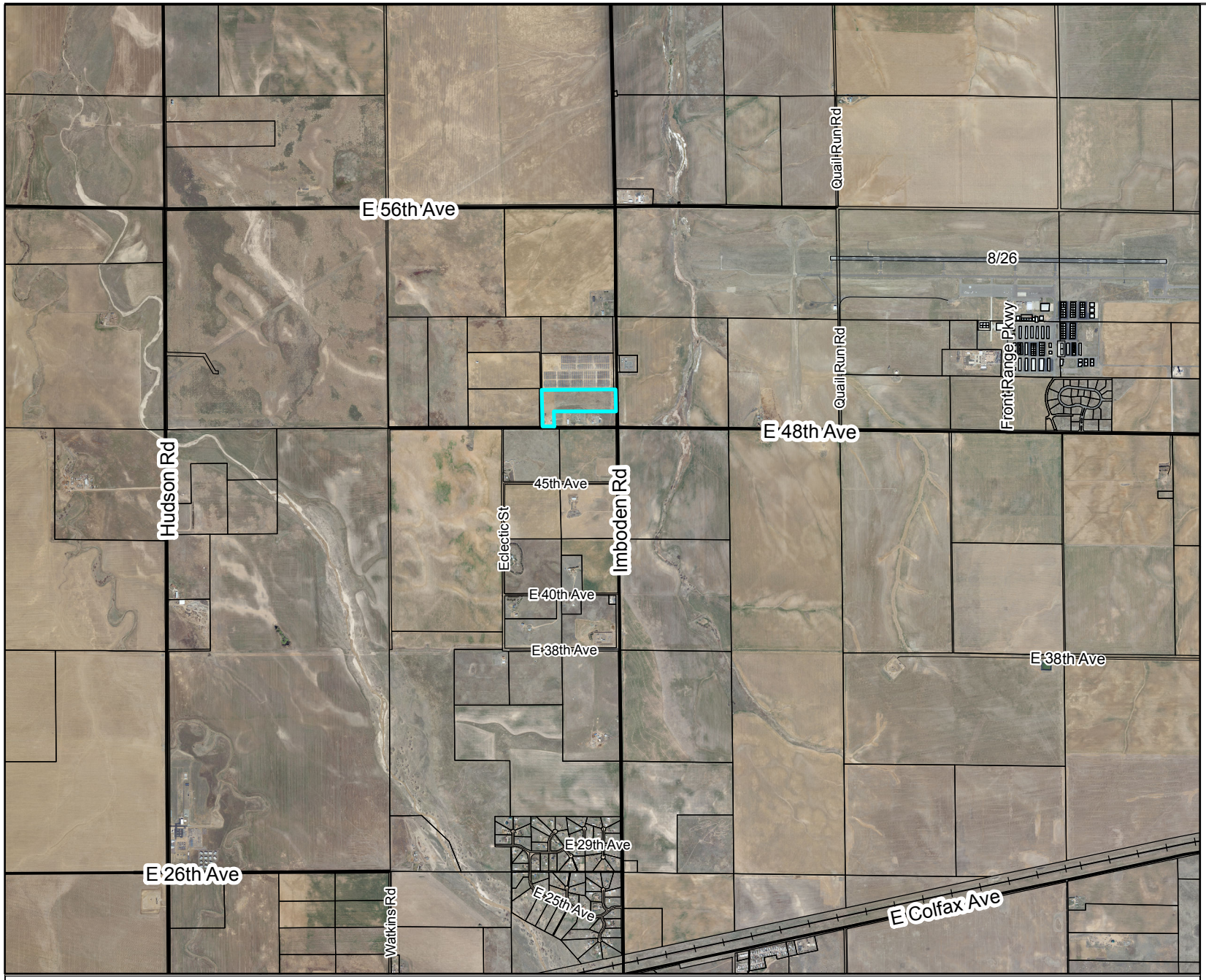

Legend

- Railroad
- Major Water
- Zoning Line
- Sections

Zoning Districts

- A-1
- A-2
- A-3
- R-E
- R-1-A
- R-1-C
- R-2
- R-3
- R-4
- M-H
- C-0
- C-1
- C-2
- C-3
- C-4
- C-5
- I-1
- I-2
- I-3
- CO
- PL
- AV
- DIA
- P-U-D
- P-U-D(P)

PRC2018-00009

Microgrid Energy

N

For display purposes only.

ADAMS COUNTY COLORADO

This map is made possible by the Adams County GIS group, which assumes no responsibility for its accuracy

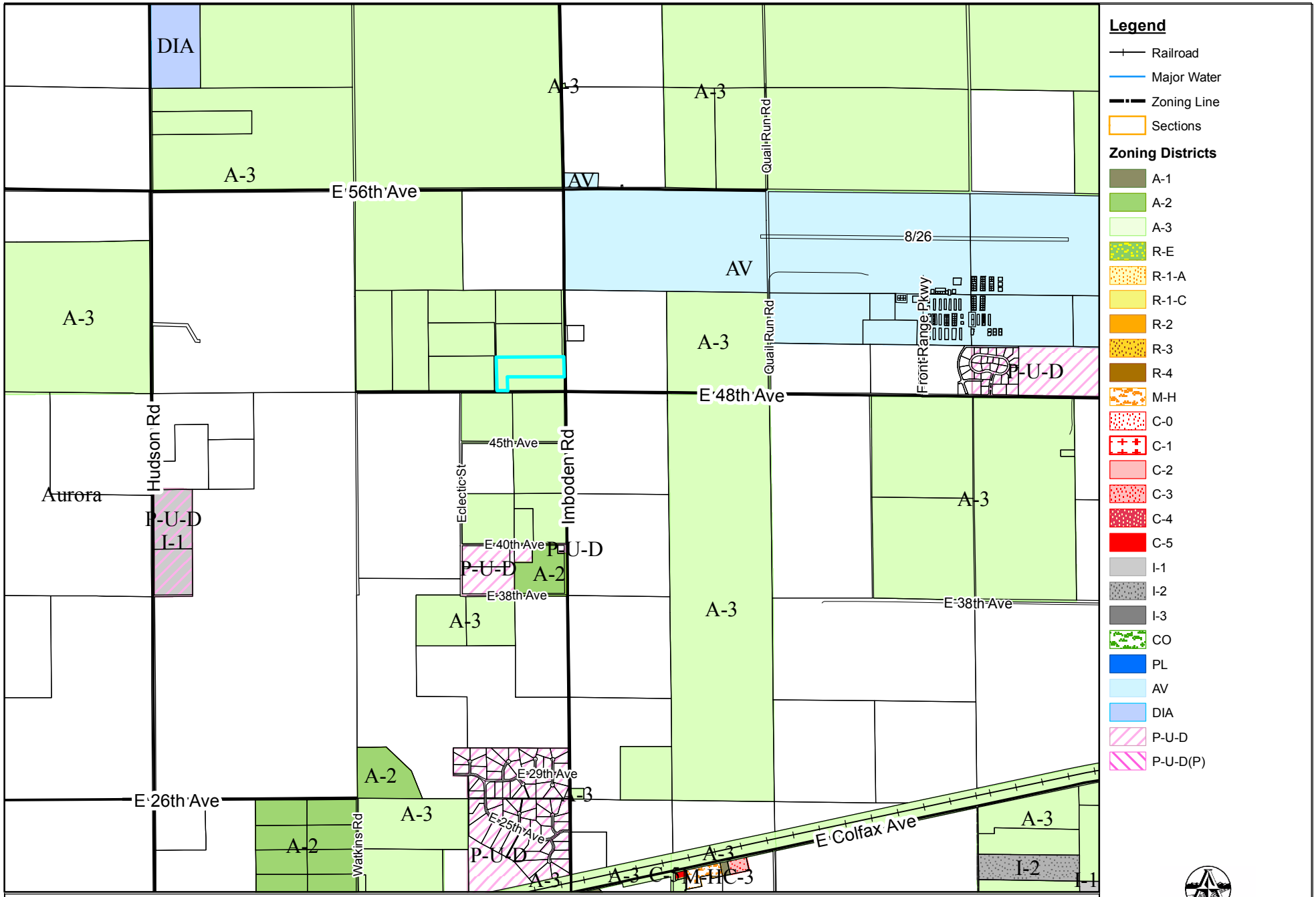

PRC2018-00009

Microgrid Energy

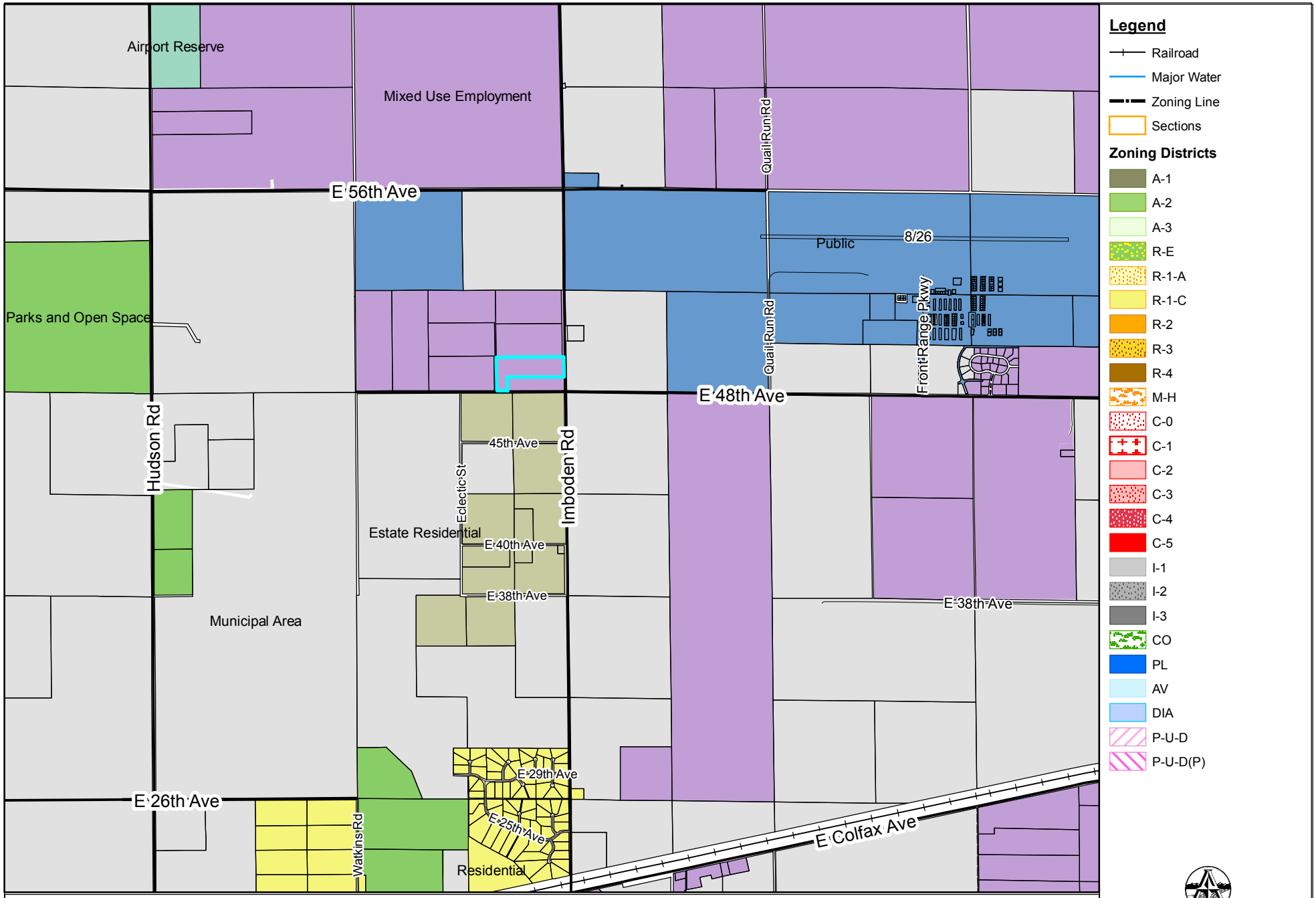

PRC2018-00009

Microgrid Energy

1536 Wynkoop Street, Suite 400, Denver, CO 80202 888.734.3033
microgridenergy.com

Microgrid Energy

June 20, 2018

Adams County Community & Economic Development Department
4430 S. Adams County Parkway
1st Floor, Suite W2000
Brighton, CO 80601-8204

RE: Request for Conditional Use Permit for Community Solar Garden (CO LI CSG 1 LLC) near 4900 Imboden Road.

Project Explanation:

CO LI CSG 1 LLC, a wholly owned subsidiary of TCA Microgrid Energy LLC, hereby makes a request on behalf of the land owner (Kamerra LLC) for a Conditional Use Permit for the parcel of land currently known as Adams County parcel 0181-700-000-325 (aka Account: R0115201).

TCA Microgrid Energy was awarded several opportunities to build community solar gardens by Xcel Energy as part of a competitive procurement process used to meet the demands of the State of Colorado's Renewable Portfolio Standard. This project is one of several TCA Microgrid Energy is building across Colorado that will help to meet the needs of this growing segment of the industry.

Once completed, the 2 MW project would operate for at least 20 years. Approximately 6,200 solar panels would be supported by a single-axis tracking solar array very similar to the one currently operating immediately north of the subject property. The footprint required for this project would be about 11.5 acres, and the project would be situated as far east on the parcel as possible, taking into account existing easements and encumbrances along the parcel boundary. Applicant is requesting the Conditional Use Permit for 22 years, which would allow for final design, equipment procurement, and installation required prior to operation, as well as decommissioning and removal of the project after operations are complete. The project itself will operate for 20 years from the day the system achieves commercial operation.

1536 Wynkoop Street, Suite 400, Denver, CO 80202 888.734.3033
microgridenergy.com

Microgrid Energy

The following information outlines key points of our application:

1. The project is concurrently being considered for rezoning and subdivision to correct an illegal subdivision that occurred in the late 1990s. If approved, the new parcel would be zoned A-2. Per Adams County Development Standards and Regulations 3-09-04-05, a Major Energy Facility is a permitted Conditional Industrial Use within this zone district. The site is not in a floodplain, and there are no site restrictions for this type of development. The location is fit for this type of development due to minimal slopes, favorable soil conditions, and proximity to other, similar developments. The land is nearly vacant at this time.
2. Applicant will design and construct the project in accordance with applicable zoning regulations and building codes, and in compliance with the requirements and conditions of the CUP issued by Adams County.
3. Any applicable performance standards associated with the CUP will be followed by the applicant.
4. The solar garden will operate for 20 years as part of Xcel Energy's Solar*Rewards Community program. All equipment used on the project will be industry standard bearing all applicable certifications required by the National Electric Code (NEC). All components will be designed to meet or exceed the anticipated lifespan of the facility. The polysilicone solar modules will be supported by single-axis tracking racks, which "follow" the path of the sun through the sky each day. The technology is clean, quiet, and doesn't generate any dust during operation.

   If approved, applicant will begin construction as soon as possible in hopes of completing construction before the end of 2018. Construction will take approximately 12 weeks, and when complete will maximize the available area within the subject parcel. The maximum height of the equipment is not expected to exceed 8' above grade. In addition to the solar panels and racks, there will be electric inverters, disconnecting boxes and switches, weather monitoring components, energy meters, and a transformer.

   To access the site, applicant plans to take access off of Imboden Road in a fashion similar to what is used immediately north of the subject parcel. Applicant will request an Access Permit from Adams County. Xcel Energy will bring their electrical lines into the site via this same general pathway.

The project area is currently vacant and consists of open prairie lands. There is an existing cedar fence along the Imboden Road frontage which the applicant proposes to remain in place for the purpose of visual screening. No screening vegetation is planned due to the existing character of the site and lack of water necessary to keep vegetation alive.

The long-term operation and maintenance of the site is limited. Typically, 4 – 8 annual visits are needed to ensure the equipment is working properly, and to keep the on-site vegetation trimmed and clean. Because of the limited site visits, the overall impact to traffic in the area will be negligible. Because the racking will be driven directly into the ground and because the access road will be gravel, there is very little increase in the imperviousness of the site. The project does not require on-site personnel after construction, so there is no need for water, sewer, septic services, or storm water drainage on site.

Following the conclusion of the project, all equipment will be removed from the project site by applicant, and any impacts to the site will be remediated with the goal of returning the site as closely as possible to the condition it was in before the project began. Most of the project components will be recycled, including the steel, aluminum, and copper that make up much of the materials.

Due to the harmonious existence of other similar projects in the immediate area, this solar array is not anticipated to cause any impact to the operations of Denver International Airport to the northwest, or Front Range Airport to the northeast. At the time of this application, Applicant is currently awaiting a determination from the FAA on the project.

Applicant has reached out to the Bennett Fire and Protection District to discuss the project, and will integrate BFPD's requirements into the final design of the solar array.

5. Applicant does not anticipated any significant off-site impacts resulting from the project, with no pollution, noise, increased traffic, or other impacts expected during normal operations. Construction impacts will be limited to the construction window discussed above. During this window, there will be increased traffic during the

morning and afternoon as workers and materials arrive and depart from the site. Space for parking and equipment lay down within the site is sufficient, and applicant has designed the project with setbacks in mind.

6. The project site is a great fit for the solar array considering the nearby uses. To the north and northeast, existing solar arrays and utility infrastructure currently operate. To the south, west, and southeast, land is dryland farmed. When the project is decommissioned, the land will again be available for development and consideration of uses suited to the area at that time. There are no environmental concerns or constraints on the parcel at this time.
7. The location of the project on the parcel is the most convenient and functional use of the parcel because it maximizes the solar array on the lot without wasting any space or taking away from other potential uses.
8. As mentioned above, the proposed project does not require sewer, water, or septic systems, and because of the negligible increase in impervious area storm water drainage is not anticipated to be a concern. The road designed and outlined by Enertia Consulting Group is adequate to provide emergency access for emergency services, and the road will function to serve the needs of the conditional use as designed and prososed.

There is currently and oil and gas lease in place on the subject parcel, but the lease is a “non-surface occupancy” lease, meaning the mineral estate owner negotiated to protect 100% of the surface from oil and gas development. Therefore, there is no need for a surface use agreement for this project. The mineral estate owner and the mineral lessee have both received notice per the provisions of C.R.S. 24-65.5-103.

Please do not hesitate to contact me with additional questions regarding the project.

Sincerely,
Jon Fitzpatrick
Director of Project Development
TCA Microgrid Energy
1536 Wynkoop St, #400
Denver, CO 80202

CONDITIONAL USE PERMIT

MICROGRID - KAMERRA 1 SOLAR GARDEN

LOCATED IN THE SOUTHEAST QUARTER OF SECTION 18, TOWNSHIP 3 SOUTH, RANGE 64 WEST OF THE 6TH P.M.

COUNTY OF ADAMS, STATE OF COLORADO

VICINITY MAP

SCALE 1" = 3000'

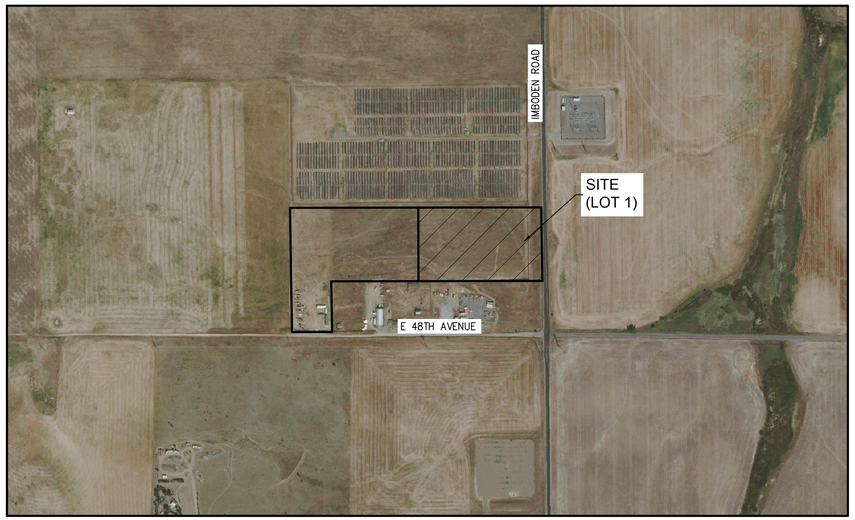

OVERALL SITE MAP

SCALE 1" = 500'

APPLICANT

MICROGRID ENERGY
1536 WYNKOOP STREET, SUITE 400
DENVER, COLORADO 80202
CONTACT: JON FITZPATRICK
(303) 506-7792

SURVEYOR

GREEN MOUNTAIN SURVERYING
1195 EDINBORO DR
BOULDER, CO 80305
CONTACT: SAMUEL KNIGHT
(970) 625-1330

ENGINEER

ENERTIA CONSULTING GROUP, LLC
1529 MARKET STREET, SUITE 200
DENVER, COLORADO 80202
CONTACT: SEAN O'HEARN, PE
(303) 473-3131

SITE DATA

EX ACCOUNT #: R0115201

EX PARCEL #: 0181700000325

PR ACCOUNT #: TBD

PR PARCEL # (LOT 1): TBD

PR PARCEL # (LOT 2): TBD

EX ZONE DISTRICT: A-3

PR ZONE DISTRICT (LOT 1 AND 2): A-2

EX PROPERTY AREA: 23.00 ACRES

PR. PROPERTY AREA (LOT 1): 11.50 ACRES

PR PROPERTY AREA (LOT 2): 11.00 ACRES

SOLAR GARDEN AREA (LOT 1): 10.45 ACRES

LOT COVERAGE (LOT 1): 3.07 ACRES

SYSTEM SIZE: 1.99 MW DC, 1.5 MW AC

TOTAL MODULES: 6,138 - CANADIAN SOLAR CS6X-325P 325 W MODULES OR SIMILAR EQUIPMENT

INVERTER: 25 - SOLECTRIA PVI 60TL 60KW INVERTERS OR SIMILAR EQUIPMENT

MOUNTING SYSTEM: 4 - ATI DURATRACK V3.0 SINGLE AXIS TRACKERS OR SIMILAR EQUIPMENT

LEGAL DESCRIPTION

A PORTION OF THAT PROPERTY DESCRIBED IN FIDELITY NATIONAL INSURANCE COMPANY TITLE REPORT NO.: F0600112-152-T56 DATED AUGUST 20,2018.

LOT 8

A PART OF SOUTHERN HALF OF SECTION 18, TOWNSHIP 3 SOUTH, RANGE 64 WEST OF THE 6TH P.M., COUNTY OF ADAMS, STATE OF COLORADO, MORE PARTICULARLY DESCRIBED AS FOLLOWS:

COMMENCING AT THE SOUTHEAST CORNER OF SECTION 18, THENCE NORTH 00°17'44" WEST ALONG THE EAST LINE OF SAID SOUTHEAST ONE-QUARTER 30.00 FEET; THENCE NORTH 89°30'07" WEST PARALLEL WITH THE SOUTH LINE OF SAID SOUTHEAST ONE-QUARTER 30.00 FEET TO THE POINT OF INTERSECTION OF THE WEST RIGHT OF WAY LINE IMBODEN ROAD AND THE NORTH RIGHT OF WAY LINE EAST OF 48TH AVENUE AND THE POINT OF BEGINNING; THENCE CONTAINING NORTH 89°30'07" WEST ALONG SAID NORTH RIGHT OF WAY LINE OF EAST 48TH AVENUE, A DISTANCE OF 1753.36 FEET; THENCE NORTH 00°17'44" WEST, A DISTANCE OF 868.72 FEET; THENCE SOUTH 89°29'44" EAST, A DISTANCE OF 1755.37 FEET, THENCE SOUTH 00°17'44" EAST, A DISTANCE OF 868.53 FEET TO THE POINT OF BEGINNING.

EXCEPT

COMMENCING AT THE SOUTHEAST CORNER OF SAID SECTION 18; THENCE NORTH 00°18'17" WEST ALONG THE EAST LINE OF SAID SOUTHEAST ONE-QUARTER 30.00 FEET; THENCE NORTH 89°30'07" WEST PARALLEL WITH THE SOUTH LINE OF SAID SOUTHEAST ONE-QUARTER 30.00 FEET TO THE POINT OF BEGINNING, SAID POINT BEING ON THE WEST RIGHT OF WAY LINE OF IMBODEN ROAD AND ON THE NORTH RIGHT OF WAY LINE OF EAST 48TH AVENUE; THENCE CONTINUING NORTH 89°30'07" WEST ALONG SAID NORTH RIGHT OF WAY LINE OF EAST 48TH AVENUE 1475.00 FEET; THENCE NORTH 00°18'17" WEST PARALLEL WITH THE EAST LINE OF SAID SOUTHEAST ONE-QUARTER 354.42 FEET; THENCE SOUTH 89°30'07" EAST PARALLEL WITH THE SOUTH LINE OF SAID SOUTHEAST ONE QUARTER 1475.00 FEET TO A POINT BEING, A DISTANCE OF 30.00 FEET WEST OF THE EAST LINE OF SAID SOUTHEAST ONE-QUARTER; THENCE SOUTH 00°13'17" WEST PARALLEL WEST SAID EAST LINE 354.42 FEET TO THE POINT OF BEGINNING.

LEGAL DESCRIPTION OF PROPERTY TO BE SUBDIVIDED

A PARCEL OF LAND LOCATED WITHIN THE SOUTHEAST QUARTER OF SECTION 18, TOWNSHIP 3 SOUTH, RANGE 64 WEST, OF THE 6TH P.M. COUNTY OF ADAMS, STATE OF COLORADO, BEING MORE PARTICULARLY DESCRIBED AS FOLLOWS:

COMMENCING AT THE SOUTHEAST CORNER OF SAID SECTION 18, AND CONSIDERING THE SOUTH LINE OF THE SOUTHEAST QUARTER OF SAID SECTION 18 TO BEAR SOUTH 89°54'29" WEST, BETWEEN THE MONUMENT LOCATED AT SAID SOUTHEAST CORNER OF SAID SECTION 18, BEING A FOUND 3 1/4" ALUMINUM CAP "JR ENG" IN A RANGE BOX, AS SHOWN AND DESCRIBED HEREON, AND THE MONUMENT LOCATED ATT THE SOUTHWEST CORNER OF THE SOUTHEAST QUARTER OF SAID SECTION 18, BEING A FOUND 3 1/4" ALUMINUM CAP "ILLEGIBLE", AS SHOWN AND DESCRIBED HEREON; THENCE NORTH 00°53'39" WEST ALONG THE EAST LINE OF SAID SOUTHEAST QUARTER 30.00 FEET; THENCE SOUTH 89°54'29" WEST PARALLEL WITH THE SOUTH LINE OF SAID SOUTHEAST QUARTER 30.00 FEET TO THE POINT OF INTERSECTION OF TEH WEST RIGHT OF WAY LINE IMBODEN ROAD AND THE NORTH RIGHT OF WAY LINE OF EAST 48TH AVENUE AND THE POINT OF BEGINNING, BEING A FOUND 3/4" BRASS TAG "ILLEGIBLE", AS SHOWN AND DESCRIBED HEREON; THENCE CONTINUING SOUTH 89°54'29" WEST ALONG SAID NORTH RIGHT OF WAY LINE OF EAST 48TH AVENUE, A DISTANCE OF 1475.03 FEET MORE OR LESS TO THE SOUTHWEST CORNER OF THAT PARCEL DESCRIBED AS ADAMS COUNTY PARCEL NUMBER 0181700000291, BEING A FOUND #5 REBAR WITH A 1 1/2" YELLOW PLASTIC CAP LS 31158 AND THE POINT OF BEGINNING; THENCE CONTINUING SOUTH 89°54'29" WEST ALONG SAID NORTH RIGHT OF WAY LINE OF EAST 48TH AVENUE, A DISTANCE OF 280.39 FEET MORE OR LESS, TO A FOUND #5 REBAR WITH A 1 1/2" YELLOW PLASTIC CAP LS 31158, AS SHOWN AND DESCRIBED HEREON; THENCE LEAVING SAID RIGHT OF WAY NORTH 00°53'20" WEST, A DISTANCE OF 868.59 FEET MORE OR LESS TO A FOUND #5 REBAR WITH A 1 1/2" YELLOW PLASTIC CAP LS 31158, AS SHOWN AND DESCRIBED HEREON; THENCE NORTH 89°54'32" EAST, A DISTANCE OF 1755.34 FEET MORE OR LESS TO A FOUND #5 REBAR WITH A 1 1/2" YELLOW PLASTIC CAP LS 31158, AS SHOWN AND DESCRIBED HEREON, AND THE WEST RIGHT OF WAY LINE OF IMBODEN ROAD; THENCE SOUTH 00°53'39" EAST ALONG SAID WEST RIGHT OF WAY LINE OF IMBODEN RD, A DISTANCE OF 514.07 FEET MORE OR LESS TO THE NORTHEAST CORNER OF SAID PARCEL DESCRIBED AS ADAMS COUNTY PARCEL NUMBER 0181700000291, BEING A FOUND #5 REBAR WITH A 1 1/2" YELLOW PLASTIC CAP LS 31158, AS SHOWN AND DESCRIBED HEREON; THENCE SOUTH 89°54'10" WEST ALONG THE NORTH LINE OF SAID PARCEL DESCRIBED AS ADAMS COUNTY PARCEL NUMBER 0181700000291, A DSITANCE OF 1475.10 FEET MORE OR LESS TO THE NORTH WEST CORNER OF SAID PARCEL DESCRIBED AS ADAMS COUNTY PARCEL NUMBER 0181700000291, BEING FOUND A #5 REBAR WITH A 1 1/2" YELLOW PLASTIC CAP LS 31158, AS SHOWN AND DESCRIBED HEREON, THENCE SOUTH 00°54'19" EAST ALONG THE WEST LINE OF SAID PARCEL DESCRIBED AS ADAMS COUNTY PARCEL NUMBER 0181700000291, A DISTANCE OF 354.37 FEET MORE OR LESS TO THE POINT OF BEGINNING.

LEGEND

- PROPERTY BOUNDARY
- LEASE AREA BOUNDARY
- SETBACK
- EXISTING EASEMENT
- EXISTING EDGE OF PAVEMENT (EOP)
- SOLAR GARDEN PERIMETER FENCE
- EXISTING CEDAR FENCE
- SECTION LINE
- SOLAR PANELS
- PROPOSED 16' GRAVEL ACCESS DRIVEWAY
- PROPOSED CONCRETE
- 25' VEGETATION FREE BUFFER
- BENCHMARK

SHEET INDEX

SHEET #	DESCRIPTION
1	COVER SHEET
2	PLAT
3	PLAT
4	GESC PLAN
5	SITE PLAN
6	SITE DETAILS
7	GESC DETAILS

ADAMS COUNTY NOTE

PUBLIC IMPROVEMENTS SHALL CONFORM TO ADAMS COUNTY STANDARDS AND SPECIFICATIONS AND LATEST EDITION OF COLORADO DEPARTMENT OF TRANSPORTATION STANDARD SPECIFICATIONS

BENCHMARK

THE SOUTHWEST CORNER OF THE SOUTHEAST QUARTER OF SECTION 18, T3S, R64W. FOUND 3 $\frac{1}{4}$" ALUMINUM CAP "JR ENG" IN RANGE BOX PER MONUMENT RECORD DATED 8/31/08

FOR BURIED UTILITY INFORMATION
THREE (3) BUSINESS DAYS BEFORE YOU DIG
CALL 811
(OR 1-800-922-1987)
UTILITY NOTIFICATION CENTER OF COLORADO (UNCC)
WWW.UNCC.ORG

NOT FOR CONSTRUCTION

NO.	DATE	REVISION	BY
DSGN		DR	CHK	APVD

PREPARED BY:
ENERTIA CONSULTING GROUP
1529 MARKET STREET, SUITE 200
DENVER, COLORADO 80202

PREPARED FOR:
Microgrid Energy
1536 WYNKOOP ST, SUITE 400
DENVER, COLORADO 80202

REUSE OF DOCUMENTS: THIS DOCUMENT, AND THE IDEAS AND DESIGNS INCORPORATED HEREIN, AS AN INSTRUMENT OF PROFESSIONAL SERVICE, IS THE PROPERTY OF ENERTIA CONSULTING GROUP AND IS NOT TO BE USED, IN WHOLE OR IN PART, FOR ANY OTHER PROJECT WITHOUT THE WRITTEN AUTHORIZATION OF ENERTIA CONSULTING GROUP.

KAMERRA 1 SOLAR GARDEN
CONDITIONAL USE PERMIT
ADAMS COUNTY, COLORADO

COVER SHEET

VERIFY SCALE
BAR IS ONE INCH ON ORIGINAL DRAWING.
0 1"

DATE	09/12/2018
FILE	
DWG	
SHEET	1 OF 7

Q:\MICROGRID\KAMERRA - ADAMS COUNTY\07-CADD\SHEETS\C1 COVER SHEET.DWG

CASE NO: PRC2018-00009

KAMERRA SUBDIVISION

A SUBDIVISION BEING A PORTION OF THE SOUTHEAST QUARTER OF SECTION 18, TOWNSHIP 3 SOUTH, RANGE 64 WEST OF THE 6TH P.M., COUNTY OF ADAMS, STATE OF COLORADO

SHEET 1 OF 2

OWNERSHIP AND DEDICATION CERTIFICATE:
KNOW ALL MEN BY THESE PRESENTS THAT KAMERRA, LLC, A COLORADO LIMITED LIABILITY COMPANY, BEING THE SOLE OWNER OF THE FOLLOWING DESCRIBED TRACT OF LAND:
A PORTION OF THAT PROPERTY DESCRIBED IN FIDELITY NATIONAL TITLE INSURANCE COMPANY TITLE REPORT NO.: F0600112-152-T56, DATED FEBRUARY 4, 2019.
LOT 8
A PART OF THE SOUTHERN HALF OF SECTION 18, TOWNSHIP 3 SOUTH, RANGE 64 WEST OF THE 6TH P.M., COUNTY OF ADAMS, STATE OF COLORADO, MORE PARTICULARLY DESCRIBED AS FOLLOWS:
COMMENCING AT THE SOUTHEAST CORNER OF SECTION 18; THENCE NORTH 00°17'44" WEST ALONG THE EAST LINE OF SAID SOUTHEAST ONE-QUARTER 30.00 FEET; THENCE NORTH 89°30'07" WEST PARALLEL WITH THE SOUTH LINE OF SAID SOUTHEAST ONE-QUARTER 30.00 FEET TO THE POINT OF INTERSECTION OF THE WEST RIGHT OF WAY LINE IMBODEN ROAD AND THE NORTH RIGHT OF WAY LINE OF EAST 48TH AVENUE AND THE POINT OF BEGINNING; THENCE CONTINUING NORTH 89°30'07" WEST ALONG SAID NORTH RIGHT OF WAY LINE OF EAST 48TH AVENUE, A DISTANCE OF 1753.36 FEET; THENCE NORTH 00°17'44" WEST, A DISTANCE OF 868.72 FEET; THENCE SOUTH 89°29'44"EAST, A DISTANCE OF 1755.37 FEET; THENCE SOUTH 00°17'44" EAST, A DISTANCE OF 868.53 FEET TO THE POINT OF BEGINNING;
EXCEPT
COMMENCING AT THE SOUTHEAST CORNER OF SAID SECTION 18; THENCE NORTH 00°18'17" WEST ALONG THE EAST LINE OF SAID SOUTHEAST ONE-QUARTER 30.00 FEET; THENCE NORTH 89°30'07" WEST PARALLEL WITH THE SOUTH LINE OF SAID SOUTHEAST ONE-QUARTER 30.00 FEET TO THE POINT OF BEGINNING, SAID POINT BEING ON THE WEST RIGHT OF WAY LINE OF IMBODEN ROAD AND ON THE NORTH RIGHT OF WAY LINE OF EAST 48TH AVENUE; THENCE CONTINUING NORTH 89°30'07" WEST ALONG SAID NORTH RIGHT OF WAY LINE OF EAST 48TH AVENUE 1475.00 FEET; THENCE NORTH 00°18_17_ WEST PARALLEL WITH THE EAST LINE OF SAID SOUTHEAST ONE-QUARTER 354.42 FEET; THENCE SOUTH 89°30'07" EAST PARALLEL WITH THE SOUTH LINE OF SAID SOUTHEAST ONE-QUARTER 1475.00 FEET TO A POINT BEING, A DISTANCE OF 30.00 FEET WEST OF THE EAST LINE OF SAID SOUTHEAST ONE-QUARTER; THENCE SOUTH 00°13'17" WEST PARALLEL WEST SAID EAST LINE 354.42 FEET TO THE POINT OF BEGINNING.

ALSO DESCRIBED AS:
A PARCEL OF LAND LOCATED WITHIN THE SOUTHEAST QUARTER OF SECTION 18, TOWNSHIP 3 SOUTH, RANGE 64 WEST, OF THE 6TH P.M. COUNTY OF ADAMS, STATE OF COLORADO, BEING MORE PARTICULARITY DESCRIBED AS FOLLOWS:
COMMENCING AT THE SOUTHEAST CORNER OF SAID SECTION 18, AND CONSIDERING THE SOUTH LINE OF THE SOUTHEAST QUARTER OF SAID SECTION 18 TO BEAR SOUTH 89°54'29" WEST, BETWEEN THE MONUMENT LOCATED AT SAID SOUTHEAST CORNER OF SAID SECTION 18, BEING A FOUND 3 1/4" ALUMINUM CAP "JR ENG" IN A RANGE BOX, AS SHOWN AND DESCRIBED HEREON, AND THE MONUMENT LOCATED AT THE SOUTHWEST CORNER OF THE SOUTHEAST QUARTER OF SAID SECTION 18, BEING A FOUND 3 1/4" ALUMINUM CAP "ILLEGIBLE", AS SHOWN AND DESCRIBED HEREON; THENCE NORTH 00°53'39" WEST ALONG THE EAST LINE OF SAID SOUTHEAST QUARTER 30.00 FEET; THENCE SOUTH 89°54'29" WEST PARALLEL WITH THE SOUTH LINE OF SAID SOUTHEAST QUARTER 30.00 FEET TO THE POINT OF INTERSECTION OF THE WEST RIGHT OF WAY LINE IMBODEN ROAD AND THE NORTH RIGHT OF WAY LINE OF EAST 48TH AVENUE, BEING A FOUND 3/4" BRASS TAG "ILLEGIBLE", AS SHOWN AND DESCRIBED HEREON; THENCE CONTINUING SOUTH 89°54'29" WEST ALONG SAID NORTH RIGHT OF WAY LINE OF EAST 48TH AVENUE, A DISTANCE OF 1475.03 FEET MORE OR LESS TO THE SOUTHWEST CORNER OF THAT PARCEL DESCRIBED IN ADAMS COUNTY RECEPTION NUMBER 2004000058830, BEING A FOUND #5 REBAR WITH A 1 1/2" YELLOW PLASTIC CAP LS 31158 AND THE POINT OF BEGINNING; THENCE CONTINUING SOUTH 89°54'29" WEST ALONG SAID NORTH RIGHT OF WAY LINE OF EAST 48TH AVENUE, A DISTANCE OF 280.39 FEET MORE OR LESS, TO A FOUND #5 REBAR WITH A 1 1/2" YELLOW PLASTIC CAP LS 31158, AS SHOWN AND DESCRIBED HEREON; THENCE LEAVING SAID RIGHT OF WAY NORTH 00°53'20" WEST, A DISTANCE OF 868.59 FEET MORE OR LESS TO A FOUND #5 REBAR WITH A 1 1/2" YELLOW PLASTIC CAP LS 31158, AS SHOWN AND DESCRIBED HEREON; THENCE NORTH 89°54'32" EAST, A DISTANCE OF 1755.34 FEET MORE OR LESS TO A FOUND #5 REBAR WITH A 1 1/2" YELLOW PLASTIC CAP LS 31158, AS SHOWN AND DESCRIBED HEREON, AND THE WEST RIGHT OF WAY LINE OF IMBODEN ROAD; THENCE SOUTH 00°53'39" EAST ALONG SAID WEST RIGHT OF WAY LINE OF IMBODEN ROAD, A DISTANCE OF 514.07 FEET MORE OR LESS TO THE NORTHEAST CORNER OF SAID PARCEL DESCRIBED IN ADAMS COUNTY RECEPTION NUMBER 2004000058830, BEING A FOUND #5 REBAR WITH A 1 1/2" YELLOW PLASTIC CAP LS 31158, AS SHOWN AND DESCRIBED HEREON; THENCE SOUTH 89°54'10" WEST ALONG THE NORTH LINE OF SAID PARCEL DESCRIBED IN ADAMS COUNTY RECEPTION NUMBER 2004000058830, A DISTANCE OF 1475.10 FEET MORE OR LESS TO THE NORTH WEST CORNER OF SAID PARCEL DESCRIBED IN ADAMS COUNTY RECEPTION NUMBER 2004000058830, BEING A FOUND #5 REBAR WITH A 1 1/2" YELLOW PLASTIC CAP LS 31158, AS SHOWN AND DESCRIBED HEREON; THENCE SOUTH 00°54'19" EAST ALONG THE WEST LINE OF SAID PARCEL DESCRIBED IN ADAMS COUNTY RECEPTION NUMBER 2004000058830, A DISTANCE OF 354.37 FEET MORE OR LESS TO THE POINT OF BEGINNING.

HAS BY THESE PRESENTS LAID OUT, PLATTED AND SUBDIVIDED THE SAME INTO LOTS, STREETS AND EASEMENTS AS SHOWN ON THIS PLAT UNDER THE NAME AND STYLE OF KAMERRA SUBDIVISION. ALL PUBLIC STREETS ARE HEREBY DEDICATED TO ADAMS COUNTY FOR PUBLIC USE. THE UNDERSIGNED DOES HEREBY DEDICATE, GRANT AND CONVEY TO ADAMS COUNTY THOSE PUBLIC EASEMENTS AS SHOWN ON THE PLAT; AND FURTHUR RESTRICTS THE USE OF ALL PUBLIC EASEMENTS TO ADAMS COUNTY AND/OR ITS ASSIGNS, PROVIDED HOWEVER, THAT THE SOLE RIGHT AND AUTHORITY TO RELAEASE OR QUITCLAIM ALL OR ANY SUCH EASEMENTS SHALL REMAIN EXCLUSIVELY VESTED IN ADAMS COUNTY.

EXCECUTED THIS _____DAY OF _____A.D., 20_____
BY: KAMERRA, LLC, A COLORADO LIMITED LIABILITY COMPANY

_____
ALLEN STUBBS, MANAGER
ON THE BEHALF OF KAMERRA LLC

STATE OF COLORADO)
)SS
COUNTY OF ADAMS)

THE FORGOING INSTRUMENT WAS ACKNOWLEDGED BY ME THIS_____ DAY OF_____

A.D., 20_____

BY:_____AS_____OF KAMERRA, LLC, A COLORADO LIMITED LIABILITY COMPANY

WITNESS MY HAND AND SEAL. MY COMMISION EXPIRES _____

MY ADDRESS IS _____
_____

_____
NOTARY PUBLIC

VICINITY MAP
NOT TO SCALE

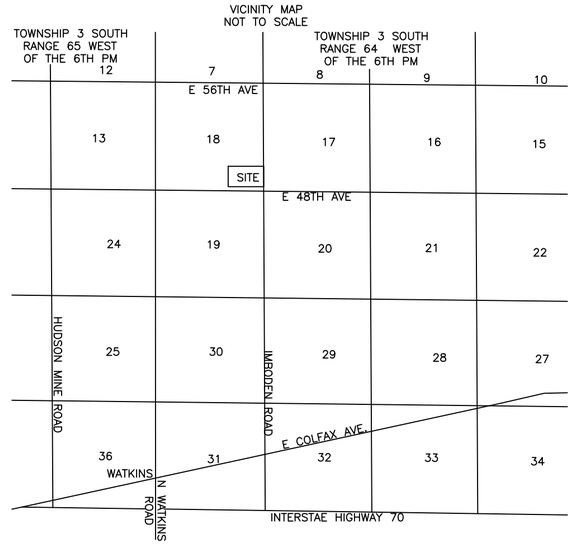

NOTES:

1) FIDELITY NATIONAL TITLE INSURANCE COMPANY REPORT NO.: F0600112-152-T56, DATED FEBRUARY 4, 2019, WAS RELIED UPON FOR RECORDED INFORMATION PERTAINING TO RIGHTS-OF-WAY, EASEMENTS AND ENCUMBRANCES IN THE PREPARATION OF THIS SUBDIVISION PLAT.

2) ACCORDING TO COLORADO LAW, YOU MUST COMMENCE ANY LEGAL ACTION BASED UPON ANY DEFECT OR EVIDENCE OF NEGLIGENCE IN THIS SURVEY WITHIN THREE YEARS AFTER YOU FIRST DISCOVER SUCH DEFECT. IN NO EVENT MAY ANY ACTION BASED UPON ANY DEFECT OR EVIDENCE OF NEGLIGENCE IN THIS SURVEY BE COMMENCED MORE THAN TEN YEARS FROM THE DATE OF THE CERTIFICATION SHOWN HEREON.

3) THE DISTANCE MEASUREMENTS SHOWN HEREON ARE THE U.S. SURVEY FOOT.

4) THIS SUBDIVISION PLAT IS VALID ONLY IF PRINT HAS ORIGINAL SEAL AND SIGNATURE OF SURVEYOR.

5) BASIS OF BEARINGS: GPS DERIVED BASED ON COLORADO STATE PLANE NORTH ZONE 0501, NAD83 (2011), GEOID12A, BEING SOUTH 89°54'29" WEST BETWEEN THE MONUMENT LOCATED AT THE SOUTHWEST CORNER, OF THE SOUTHEAST QUARTER, OF SECTION 18, TOWNSHIP 3 SOUTH , RANGE 64 WEST, OF THE 6TH P.M., BEING A FOUND 3 1/4" ALUMINUM CAP "JR ENG" IN A RANGE BOX AS SHOWN AND DESCRIBED HEREON, AND THE MONUMENT LOCATED AT THE THE SOUTHWEST CORNER, OF THE SOUTHEAST QUARTER, OF SAID SECTION 18, BEING A FOUND 3 1/4" ALUMINUM CAP ON 1" AXLE ±1' DOWN AS SHOWN AND DESCRIBED HEREON. WITH ALL OTHER BEARINGS AND DISTANCES SHOWN HEREON RELATED THERETO.

6) THE TOTAL AREA OF THE PROPERTY TO BE SUBDIVIDED IS 1001773 SQ. FEET OR 23.00 ACRES MORE OR LESS.

7) SIX-FOOT (6') WIDE UTILITY EASEMENTS ARE HEREBY DEDICATED ON PRIVATE PROPERTY ADJACENT TO THE FRONT LOT LINES OF EACH LOT IN THE SUBDIVISION. IN ADDITION, EIGHT-FOOT (8_) WIDE DRY UTILITY EASEMENTS ARE HEREBY DEDICATED AROUND THE PERIMETER OF TRACTS, PARCELS AND/OR OPEN SPACE AREAS. THESE EASEMENTS ARE DEDICATED TO ADAMS COUNTY FOR THE BENEFIT OF THE APPLICABLE UTILITY PROVIDERS FOR THE INSTALLATION, MAINTENANCE, AND REPLACEMENT OF UTILITIES. UTILITY EASEMENTS SHALL ALSO BE GRANTED WITHIN ANY ACCESS EASEMENTS AND PRIVATE STREETS IN THE SUBDIVISION. PERMANENT STRUCTURES, IMPROVEMENTS, OBJECTS, BUILDINGS, WELLS, WATER METERS AND OTHER OBJECTS THAT MAY INTERFERE WITH THE UTILITY FACILITIES OR USE THEREOF (INTERFERING OBJECTS) SHALL NOT BE PERMITTED WITHIN SAID UTILITY EASEMENTS AND THE UTILITY PROVIDERS, AS GRANTEES, MAY REMOVE ANY INTERFERING OBJECTS AT NO COST TO SUCH GRANTEES, INCLUDING, WITHOUT LIMITATION, VEGETATION.

8) THE POLICY OF THE COUNTY REQUIRES THAT MAINTENANCE ACCESS SHALL BE PROVIDED TO ALL STORM DRAINAGE FACILITIES TO ASSURE CONTINUOUS OPERATIONAL CAPABILITY OF THE SYSTEM. THE PROPERTY OWNERS SHALL BE RESPONSIBLE FOR THE MAINTENANCE OF ALL DRAINAGE FACILITIES INCLUDING INLETS, PIPES, CULVERTS, CHANNELS, DITCHES, HYDRAULIC STRUCTURES, AND DETENTION BASINS LOCATED ON THEIR LAND UNLESS MODIFIED BY THE SUBDIVISION DEVELOPMENT AGREEMENT. SHOULD THE OWNER FAIL TO MAINTAIN SAID FACILITIES, THE COUNTY SHALL HAVE THE RIGHT TO ENTER SAID LAND FOR THE SOLE PURPOSE OF OPERATIONS AND MAINTENANCE. ALL SUCH MAINTENANCE COST WILL BE ASSESSED TO THE PROPERTY OWNERS.

9) CONTRACTOR IS REQUIRED TO INSTALL AND MAINTAIN CONSTRUCTION BMPS ACCORDING TO THE CONDITIONALLY ACCEPTED GESC PLAN AND BMP DETAIL DRAWINGS AND ENSURE THEY ARE IN EFFECTIVE WORKING CONDITION TO FUNCTION AS DESIGNED UNTIL THE COMPLETION OF CONSTRUCTION. BMPS ARE TO BE INSTALLED AND MAINTAINED IN ACCORDANCE WITH THE URBAN DRAINAGE AND FLOOD CONTROL DISTRICT'S URBAN STORM DRAINAGE CRITERIA MANUAL, VOLUME 3.

10) FLOOD INSURANCE RATE MAP, FIRM PANEL # (08001C0690H), FEDERAL EMERGENCY MANAGEMENT AGENCY, JANUARY 20, 2016. ACCORDING TO THE ABOVE REFERENCE, THE PROJECT SITE IS NOT LOCATED WITHIN A DELINEATED 100-YEAR FLOOD HAZARD ZONE; A FLOODPLAIN USE PERMIT WILL NOT BE REQUIRED

NOTES CONTINUED:

11) A 42' WIDE PORTION OF THE PROPERTY TO BE SUBDIVIDED IS TO BE DEDICATED TO THE COUNTY OF ADAMS AS A PORTION OF IMBODEN ROAD RIGHT OF WAY BY THIS PLAT.

12) THE DRAINAGE EASEMENT ADAMS COUNTY RECEPTION NUMBER C1025627 DOES NOT APPEAR TO AFFECT THE SUBJECT PROPERTY AND THEREFOR HAS NOT BEEN SHOWN HEREON.

ATTORNEY'S CERTIFICATE

I_____, AN ATTORNEY AT LAW DULY LICENSED TO PRACTICE BEFORE THE COURTS OF RECORD OF COLORADO, DO HEREBY CERTIFY THAT I HAVE EXAMINED THE TITLE OF ALL LANDS HEREIN ABOVE INDICATED AND SHOWN UPON THE WITHIN PLATS PUBLIC WAYS AND EASEMENTS AND THAT TITLE TO SUCH LAND IS IN THE DEDICATOR'S, FREE AND CLEAR OF ALL LIENS AND ENCUMBRANCES OF RECORD.

DATED THIS ____DAY OF _____, 20____.

_____
COUNTY ATTORNEY

BOARD OF COUNTY COMMISSIONERS

APPROVED BY THE ADAMS COUNTY BOARD OF COMMISSIONERS THIS _____DAY OF

_____A.D., 20_____

_____
CHAIR

CLERK AND RECORDER'S CERTIFICATE:

THIS PLAT FILED FOR RECORD IN THE OFFICE OF ADAMS COUNTY CLERK AND RECORDER,

IN THE STATE OF COLROADO, AT_____:_____ ____.M. ON THE _____DAY OF

_____A.D., 20_____

_____
COUNTY CLERK AND RECORDER

BY:_____
DEPUTY

RECEPTION NO._____

SURVEYOR'S STATEMENT:

I, SAMUEL A. KNIGHT, A DULY REGISTERED LAND SURVEYOR, LICENSED IN THE STATE OF COLORADO, HEREBY STATE FOR AND ON THE BEHALF OF GREEN MOUNTAIN SURVEYING, THAT A SURVEY OF THE ABOVE DESCRIBED PREMISES WAS CONDUCTED BY ME, AND THAT SAID SURVEY AND THE ATTACHED SUBDIVISION PLAT ARE ACCURATE TO THE BEST OF KNOWLEDGE, INFORMATION, AND BELIEF.

DRAFT COPY FOR YOUR REVIEW AND COMMENT

_____ _____
SAMUEL A KNIGHT DATE
CO PLS 38127 KAMERRA SUBDIVISION
GREEN MOUNTAIN SURVEYING
BOULDER CO, 80305
303-601-8588

COPYRIGHT GREEN MOUNTAIN SURVEYING 2019

KAMERRA SUBDIVISION

A SUBDIVISION BEING A PORTION OF THE SOUTHEAST QUARTER OF SECTION 18, TOWNSHIP 3 SOUTH, RANGE 64 WEST OF THE 6TH P.M., COUNTY OF ADAMS, STATE OF COLORADO

SHEET 2 OF 2

CASE NO: PRC2018-00009

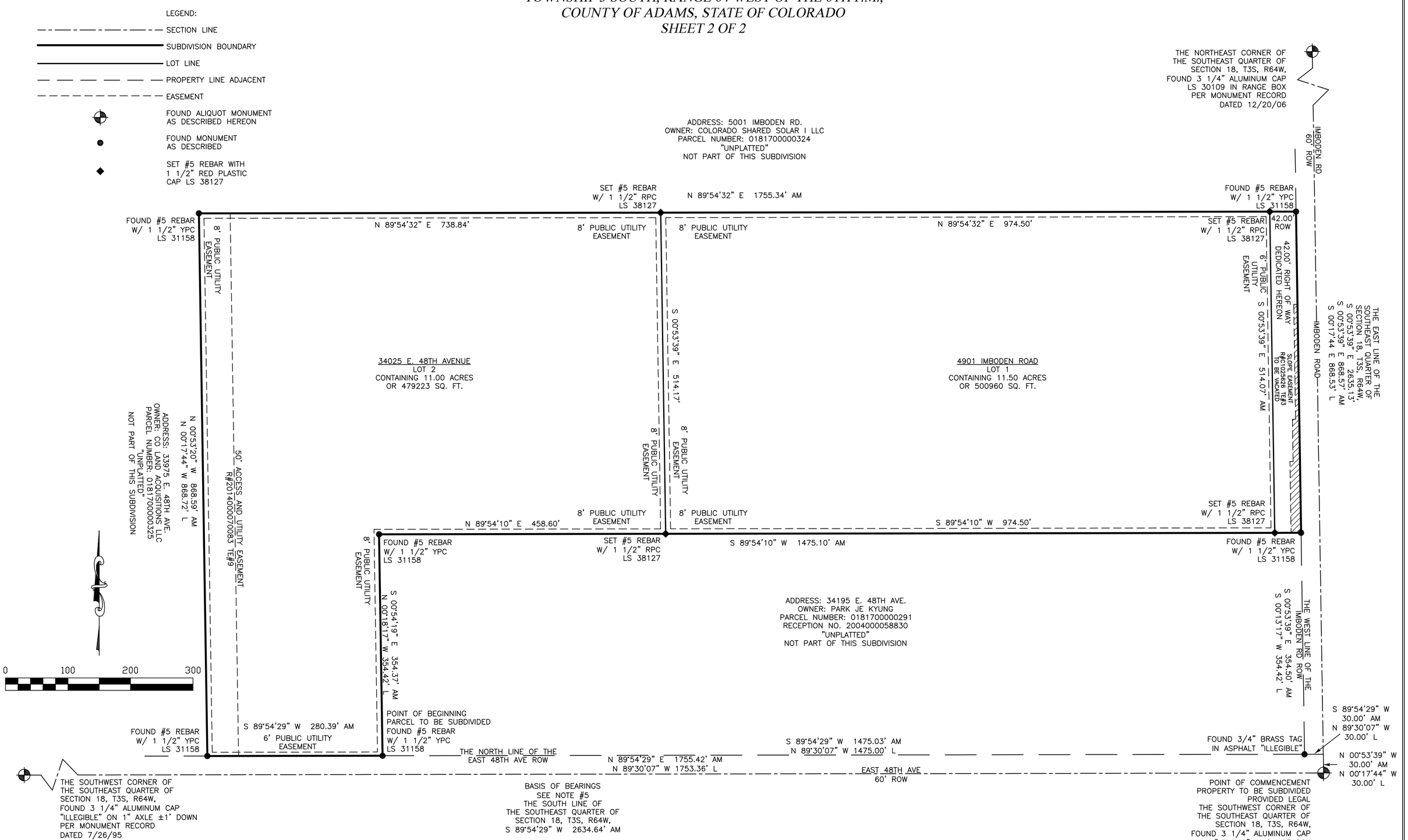

DRAFT COPY FOR YOUR REVIEW AND COMMENT

LEGEND

- PROPERTY BOUNDARY
- LIMITS OF CONSTRUCTION
- LEASE AREA BOUNDARY
- SF — SF — SF — SF — SILT FENCE
- EXISTING EASEMENT
- EDGE OF PAVEMENT (EOP)
- x — x — SOLAR GARDEN PERIMETER FENCE
- EXISTING CEDAR FENCE
- SECTION LINE
- SOLAR PANELS
- PROPOSED 16' GRAVEL ACCESS DRIVEWAY
- PROPOSED CONCRETE
- FLOW DIRECTION ARROW

0' 30' 60' 120'
SCALE: 1"=60'

N

EROSION & SEDIMENT CONTROL NOTES

- CONTRACTOR MUST ADHERE TO THE SWMP AND GESC PREPARED FOR THIS PROJECT. CONTRACT MUST ALSO KEEP COPIES OF THE SWMP AND GESC PLANS ON SITE THROUGH OUT THE DURATION OF THE PROJECT.

SUMMARY OF WORK

INITIAL PHASE

- MOBILIZATION AND SET UP OF THE CONSTRUCTION SITE.

INSTALLATION OF INITIAL BMP'S

INTERIM PHASE

- OVERLOT GRADING OF THE DRIVEWAY
- INSTALLATION OF INTERIM BMPS
- UTILITY INSTALLATION.
- DISTURBED SURFACES SHALL BE STABILIZED IF THEY ARE INACTIVE FOR A PERIOD OF 30 DAYS OR LONGER. APPROXIMATE STABILIZATION METHODS SUCH AS SEEDING, MULTCHING OR OTHER METHODS RECOMMENDED IN VOLUME 3 OF THE UDFCD MANUAL MAY BE USED.

FINAL PHASE

- REMOVE TEMPORARY EROSION AND SEDIMENT CONTROL BMPs.
  - •• PERIMETER SEDIMENT CONTROLS MUST REMAIN IN PLACE UNTIL 70 PERCENT VEGETATION IS ESTABLISHED FOR ALL OF THE DISTURBED AREAS.

EROSION & SEDIMENT CONTROL LEGEND

SILT FENCE OR ALTERNATIVE SEDIMENT CONTROL LOG	SF 1	SF
VEHICLE TRACKING CONTROL	VTC 1	
CONCRETE WASHOUT AREA	CWA 1	

NOTES

1. EQUIPMENT PAD TYPICALLY INCLUDES AC COMBINER PANEL, AC SWITCHGER, LOW VOLTAGE PANEL, ZIG ZAG TRANSFORMER, PRODUCTION METER, AC DISCONNECT, LOCKING BILLING METER, DAS, POCC.
2. LOCATION OF EXISTING UTILITIES SHALL BE VERIFIED BY CONTRACTOR PRIOR TO CONSTRUCTION. CONTRACTOR SHALL BE RESPONSIBLE FOR LOCATION, SUPPORT, PROTECTION, AND RESTORATION OF ALL EXISTING UTILITIES AND APPURTENANCES, WHETHER SHOWN OR NOT SHOWN ON THE APPROVED CONSTRUCTION DOCUMENTS.
3. PROVIDING NOTIFICATION AND RECEIVING MARKINGS OF UNDERGROUND MEMBER UTILITIES IN NO WAY CONSTITUTES PERMISSION TO PERFORM CONSTRUCTION.
4. THE CONTRACTOR SHALL BE RESPONSIBLE FOR THE LOCATION, PROTECTION, AND REPAIR OF ALL UTILITIES ENCOUNTERED DURING CONSTRUCTION, WHETHER SHOWN ON THESE PLANS OR NOT. THE CONTRACTOR SHALL CONTACT ALL RESPECTIVE UTILITIES AND HAVE ALL UTILITIES FIELD LOCATED PRIOR TO CONSTRUCTION. IT SHALL BE THE CONTRACTORS RESPONSIBILITY TO VERIFY THE LOCATION OF ALL EXISTING STRUCTURES AND UTILITIES SHOWN ON THE DRAWINGS, TO ASCERTAIN WHETHER ANY STRUCTURES AND UTILITIES MAY EXIST, AND TO REPAIR OR REPLACE ANY STRUCTURES AND UTILITIES THAT MIGHT BE DAMAGED.
5. LOCATIONS OF UTILITIES REPRESENT THE BEST KNOWN LOCATIONS AT THE TIME OF PREPARATION OF DRAWINGS. THE CONTRACTOR SHALL FIELD LOCATE ALL UTILITIES IN ADVANCE OF EXCAVATION. RELOCATION OF UTILITIES IS NOT ANTICIPATED FOR THIS PROJECT. IF REQUIRED, THE CONTRACTOR SHALL COOPERATE WITH COMPANIES TRYING TO COORDINATE THE RELOCATION EFFORT. LINES NOT RELOCATED SHALL BE PROTECTED BY THE CONTRACTOR. NO ADDITIONAL PAYMENT WILL BE ALLOWED FOR THE MINOR ADJUSTMENT OF STRUCTURES IN ORDER TO CLEAR A CONFLICTING UTILITY.
6. THERE ARE NO PROPOSED GRADING ACTIVITIES WITH KAMERRA 1 SOLAR GARDEN PROJECT. IT IS ANTICIPATED THAT THE PV ARRAYS CAN BE SITED AT EXISTING GRADE.
7. TREES AND SHRUBS ARE NOT OBSERVED WITHIN THE PV ARRAY AREAS. TREES AND SHRUBS ARE TO BE REMOVED AS NECESSARY TO ALLOW FOR THE INSTALLATION OF THE ARRAYS AND TO ELIMINATE SHADING.
8. CONTRACTOR IS REQUIRED TO INSTALL AND MAINTAIN CONSTRUCTION BMPS ACCORDING TO THE CONDITIONALLY ACCEPTED GESC PLAN AND BMP DETAIL DRAWINGS AND ENSURE THEY ARE IN EFFECTIVE WORKING CONDITION TO FUNCTION AS DESIGNED UNTIL THE COMPLETION OF CONSTRUCTION. BMPS ARE TO BE INSTALLED AND MAINTAINED IN ACCORDANCE WITH THE URBAN DRAINAGE AND FLOOD CONTROL DISTRICT'S URBAN STORM DRAINAGE CRITERIA MANUAL, VOLUME 3.

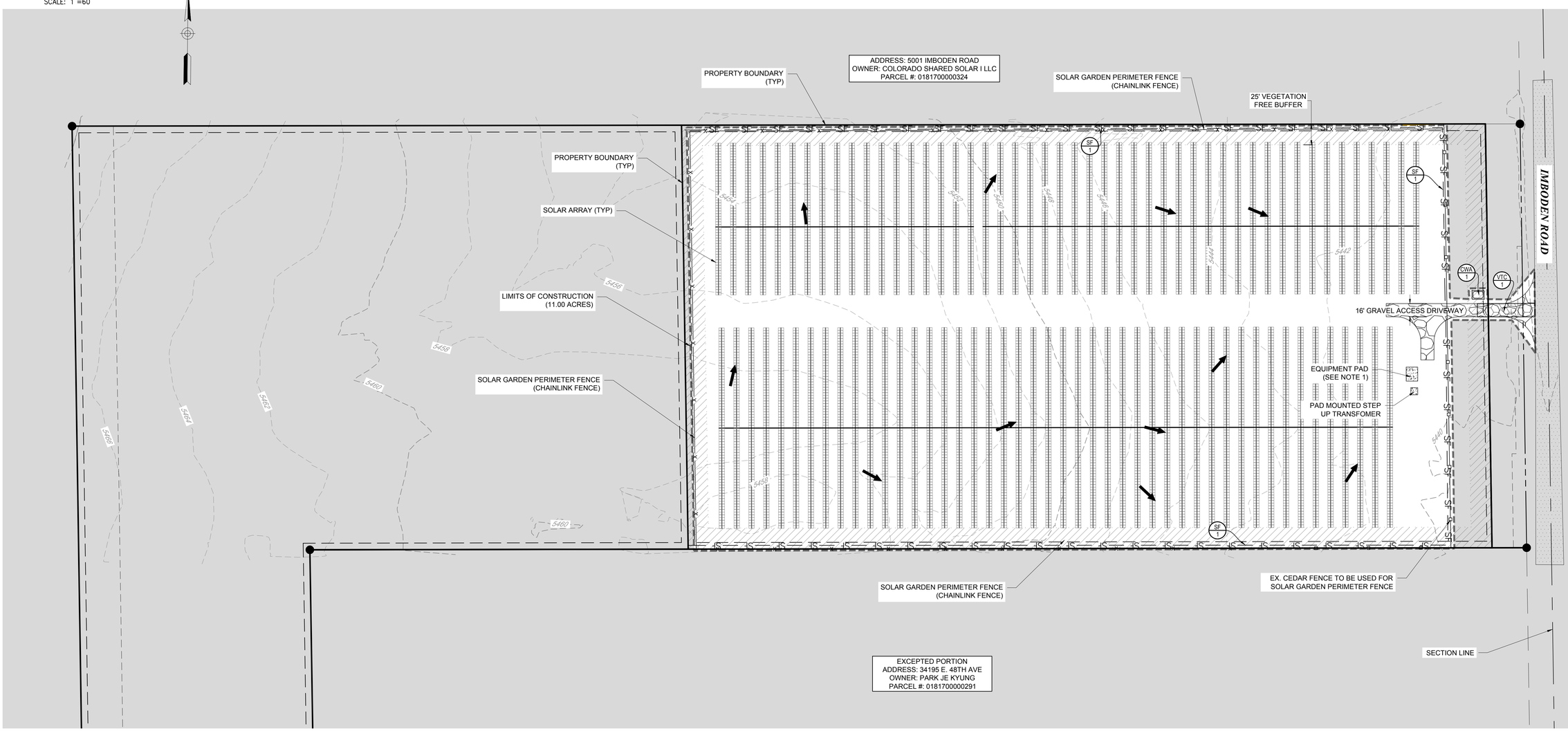

NOT FOR CONSTRUCTION

NO.	DATE	REVISION	BY
DSGN	DR	CHK	APVD

PREPARED BY:
ENERTIA CONSULTING GROUP
1529 MARKET STREET, SUITE 200
DENVER, COLORADO 80202

PREPARED FOR:
Microgrid Energy
1536 WYNKOOP ST, SUITE 400
DENVER, COLORADO 80202

REUSE OF DOCUMENTS: THIS DOCUMENT, AND THE IDEAS AND DESIGNS INCORPORATED HEREIN, AS AN INSTRUMENT OF PROFESSIONAL SERVICE, IS THE PROPERTY OF ENERTIA CONSULTING GROUP AND IS NOT TO BE USED, IN WHOLE OR IN PART, FOR ANY OTHER PROJECT WITHOUT THE WRITTEN AUTHORIZATION OF ENERTIA CONSULTING GROUP.

KAMERRA 1 SOLAR GARDEN CONDITIONAL USE PERMIT

ADAMS COUNTY, COLORADO

GRADING & EROSION CONTROL PLAN

VERIFY SCALE
BAR IS ONE INCH ON ORIGINAL DRAWING.
0 1"

DATE	09/12/2018
FILE	
DWG	
SHEET	4 OF 7

Q:\MICROGRID\KAMERRA - ADAMS COUNTY\27-CADD\SHEETS\4 GESC PLAN.DWG

LEGEND

- PROPERTY BOUNDARY
- LEASE AREA BOUNDARY
- SETBACK
- EXISTING EASEMENT
- EDGE OF PAVEMENT (EOP)
- EXISTING CEDAR FENCE
- SOLAR GARDEN PERIMETER FENCE (CHAINLINK)
- EX FENCE (CEDAR)
- SECTION LINE
- SOLAR PANELS
- PROPOSED 16' GRAVEL ACCESS DRIVEWAY
- PROPOSED CONCRETE
- FUTURE SOLAR GARDEN
- 25' VEGETATION FREE BUFFER
- BENCHMARK

0' 30' 60' 120'
SCALE: 1"=60'

NOTES

1. EQUIPMENT PAD TYPICALLY INCLUDES AC COMBINER PANEL, AC SWITCHGER, LOW VOLTAGE PANEL, ZIG ZAG TRANSFORMER, PRODUCTION METER, AC DISCONNECT, LOCKING BILLING METER, DAS, POCC.
2. LOCATION OF EXISTING UTILITIES SHALL BE VERIFIED BY CONTRACTOR PRIOR TO CONSTRUCTION. CONTRACTOR SHALL BE RESPONSIBLE FOR LOCATION, SUPPORT, PROTECTION, AND RESTORATION OF ALL EXISTING UTILITIES AND APPURTENANCES, WHETHER SHOWN OR NOT SHOWN ON THE APPROVED CONSTRUCTION DOCUMENTS.
3. PROVIDING NOTIFICATION AND RECEIVING MARKINGS OF UNDERGROUND MEMBER UTILITIES IN NO WAY CONSTITUTES PERMISSION TO PERFORM CONSTRUCTION.
4. THE CONTRACTOR SHALL BE RESPONSIBLE FOR THE LOCATION, PROTECTION, AND REPAIR OF ALL UTILITIES ENCOUNTERED DURING CONSTRUCTION, WHETHER SHOWN ON THESE PLANS OR NOT. THE CONTRACTOR SHALL CONTACT ALL RESPECTIVE UTILITIES AND HAVE ALL UTILITIES FIELD LOCATED PRIOR TO CONSTRUCTION. IT SHALL BE THE CONTRACTORS RESPONSIBILITY TO VERIFY THE LOCATION OF ALL EXISTING STRUCTURES AND UTILITIES SHOWN ON THE DRAWINGS, TO ASCERTAIN WHETHER ANY STRUCTURES AND UTILITIES MAY EXIST, AND TO REPAIR OR REPLACE ANY STRUCTURES AND UTILITIES THAT MIGHT BE DAMAGED.
5. LOCATIONS OF UTILITIES REPRESENT THE BEST KNOWN LOCATIONS AT THE TIME OF PREPARATION OF DRAWINGS. THE CONTRACTOR SHALL FIELD LOCATE ALL UTILITIES IN ADVANCE OF EXCAVATION. RELOCATION OF UTILITIES IS NOT ANTICIPATED FOR THIS PROJECT. IF REQUIRED, THE CONTRACTOR SHALL COOPERATE WITH COMPANIES TRYING TO COORDINATE THE RELOCATION EFFORT. LINES NOT RELOCATED SHALL BE PROTECTED BY THE CONTRACTOR. NO ADDITIONAL PAYMENT WILL BE ALLOWED FOR THE MINOR ADJUSTMENT OF STRUCTURES IN ORDER TO CLEAR A CONFLICTING UTILITY.
6. THERE ARE NO PROPOSED GRADING ACTIVITIES WITH KAMERRA 1 SOLAR GARDEN PROJECT. IT IS ANTICIPATED THAT THE PV ARRAYS CAN BE SITED AT EXISTING GRADE.
7. TREES AND SHRUBS ARE NOT OBSERVED WITHIN THE PV ARRAY AREAS. TREES AND SHRUBS ARE TO BE REMOVED AS NECESSARY TO ALLOW FOR THE INSTALLATION OF THE ARRAYS AND TO ELIMINATE SHADING.

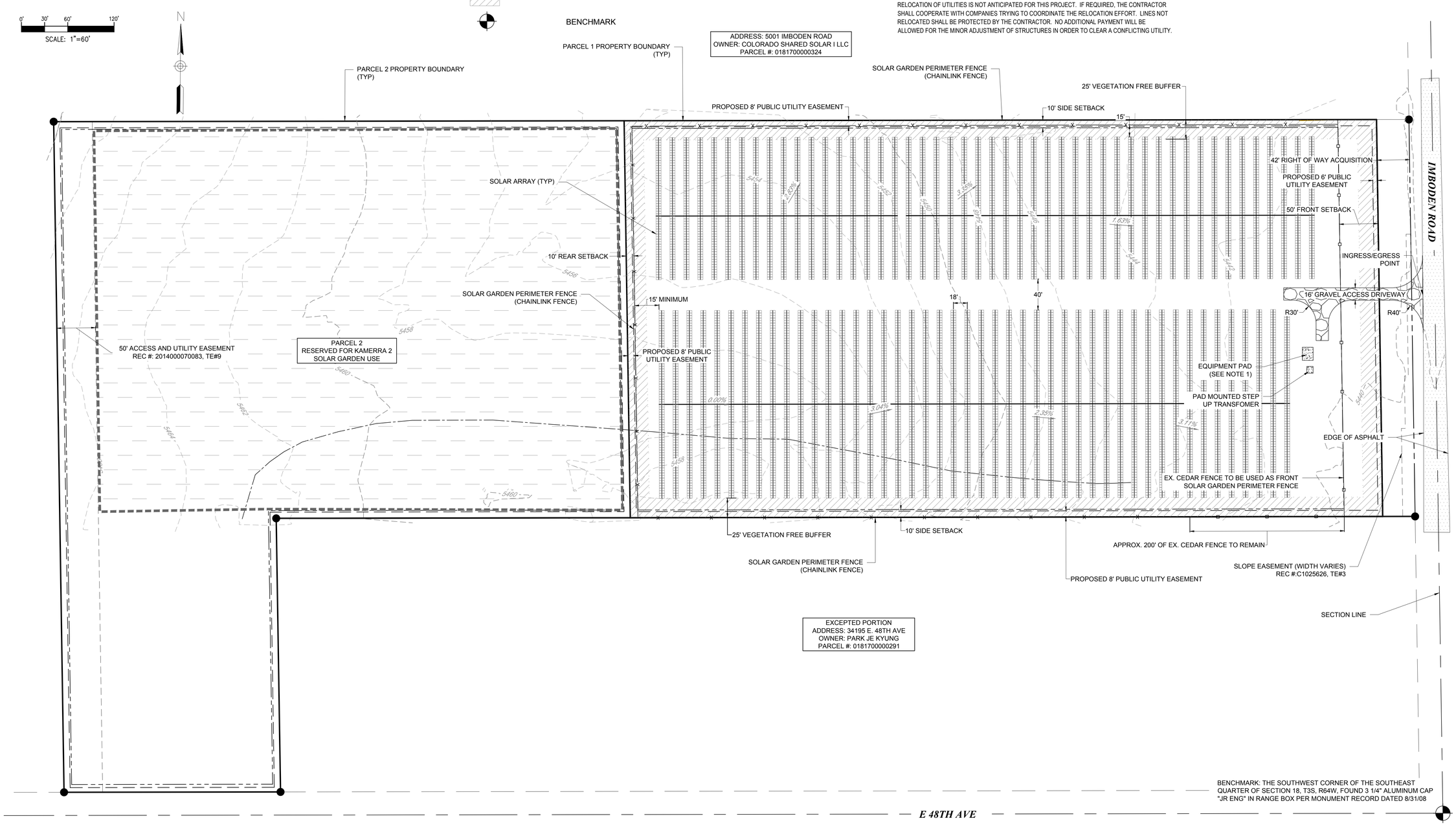

NOT FOR CONSTRUCTION

NO.	DATE	REVISION	BY
DSGN	DR	CHK	APVD

PREPARED BY:
ENERTIA CONSULTING GROUP
1529 MARKET STREET, SUITE 200
DENVER, COLORADO 80202

PREPARED FOR:
Microgrid Energy
1536 WYNKOOP ST, SUITE 400
DENVER, COLORADO 80202

REUSE OF DOCUMENTS: THIS DOCUMENT, AND THE IDEAS AND DESIGNS INCORPORATED HEREIN, AS AN INSTRUMENT OF PROFESSIONAL SERVICE, IS THE PROPERTY OF ENERTIA CONSULTING GROUP AND IS NOT TO BE USED, IN WHOLE OR IN PART, FOR ANY OTHER PROJECT WITHOUT THE WRITTEN AUTHORIZATION OF ENERTIA CONSULTING GROUP.

KAMERRA 1 SOLAR GARDEN CONDITIONAL USE PERMIT
ADAMS COUNTY, COLORADO

SITE PLAN

VERIFY SCALE
BAR IS ONE INCH ON ORIGINAL DRAWING.
0 1"

DATE	09/12/2018
FILE	
DWG	
SHEET	5 OF 7

Q:\MICROGRID\KAMERRA - ADAMS COUNTY\07-CADD\SHEETS\C4 SITE PLAN.DWG

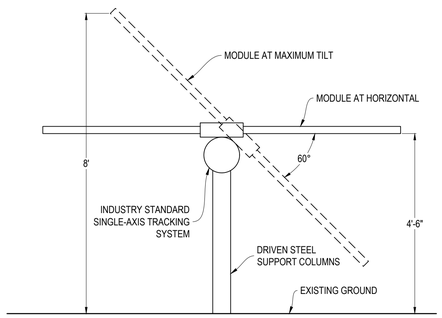

NOTE: FINAL DIMENSIONS SUBJECT TO FINAL DESIGN.

TYPICAL PV ARRAY RACKING SYSTEM

NOT TO SCALE

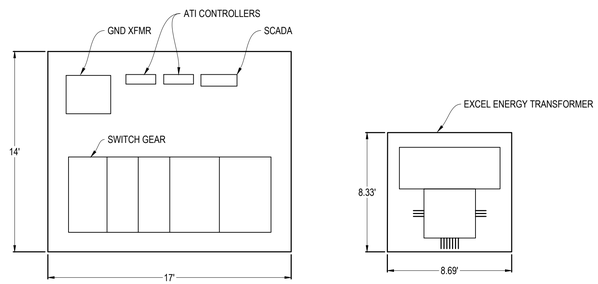

TYPICAL EQUIPMENT PAD LAYOUT

NOT TO SCALE

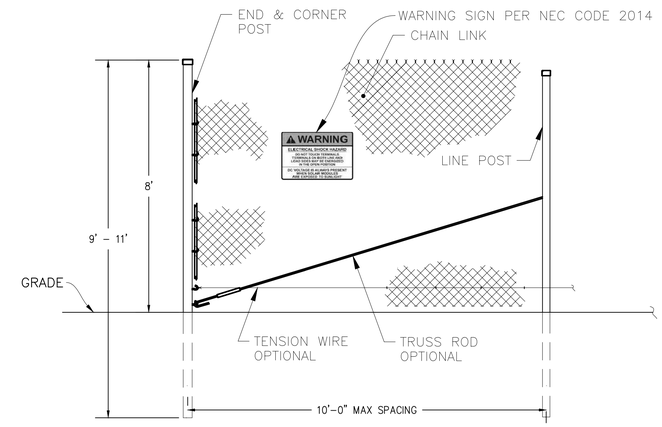

CHAIN LINK FENCE (TYP)

NOT TO SCALE

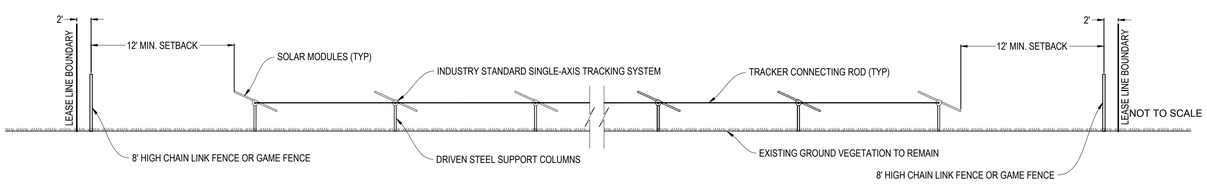

NOT TO SCALE

SOLAR GARDEN CROSS SECTION

NOT TO SCALE

GAME FENCE PHOTO

TYP

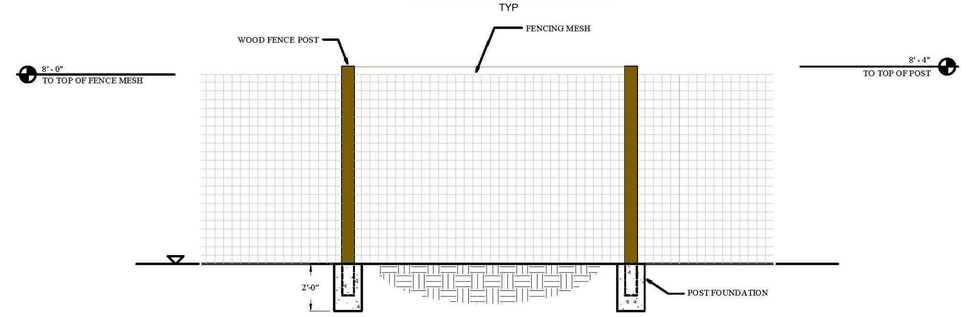

GAME FENCE DETAIL (SOUTH SIDE OF SOLAR ARRAY)

NOT FOR CONSTRUCTION

NO.	DATE	REVISION	BY
DSGN	DR	CHK	APVD

PREPARED BY:

ENERTIA CONSULTING GROUP
1529 MARKET STREET, SUITE 200
DENVER, COLORADO 80202

PREPARED FOR:

Microgrid Energy
1536 WYNKOOP ST. SUITE 400
DENVER, COLORADO 80202

REUSE OF DOCUMENTS - THIS DOCUMENT, AND THE IDEAS AND DESIGNS INCORPORATED HEREIN, AS AN INSTRUMENT OF PROFESSIONAL SERVICE, IS THE PROPERTY OF ENERTIA CONSULTING GROUP AND IS NOT TO BE USED, IN WHOLE OR IN PART, FOR ANY OTHER PROJECT WITHOUT THE WRITTEN AUTHORIZATION OF ENERTIA CONSULTING GROUP.

BH CSG1 SOLAR GARDEN
SPECIAL USE PERMIT
PUEBLO COUNTY, COLORADO

SITE DETAILS

VERIFY SCALE
BAR IS ONE INCH ON ORIGINAL DRAWING.
0 1"

DATE	09/12/2018
FILE	
DWG	
SHEET	6 OF 7

Q:\MICROGRIDKAMERRA - ADAMS COUNTY\07-CADD\SHEETS\6 SITE DETAILS.DWG

Eco-Pan Specification sheet

Eco-Pan objective
Allows for easy concrete pump washout, ready mix trucks, and other equipment associated with cement on site and easy off site recycling of the same concrete materials

Eco-Pan Application
Construction projects where concrete, stucco, mortar, grout and cement are used as a construction material or where cementitious wastewater is created.

Eco-Pan Maintenance
Inspect and clean out when ¾ full, not allowing the Eco-Pan to overflow.
Inspect wastewater level and request service, Replace with empty Eco-Pan, as needed.
Inspect Eco-Pan's to ensure that proper housekeeping are employed when washing out equipment.

Description
A self-contained and watertight eco-pan with added fork channels for portability captures and contains concrete wastewater and washout material. Our eco-pan's come in two sizes to accommodate every size pour, 1 yard /2 ton or 2.5 yard 4.5 ton.

SPECIFICATIONS
The eco-pan must be portable and temporary, watertight, equipped with fork channels and have a holding capacity to accept washout from approximately 250 yds - 2.5 yard /4.5ton, Or, 150yards-1yard /2 ton of poured concrete.

2.5 YARD / 4.5 TON

600 Gallon Capacity
20 to 30 Mixer Wash Outs*
7' x 7' x 26"

1 YARD / 2 TON

300 Gallon Capacity
10 to 15 Mixer Wash Outs*
7'x 7' x 14" (Enough to contain material from Pump Hopper)

CONCRETE WASHOUT DETAIL

NOT TO SCALE

Vehicle Tracking Control (VTC) SM-4

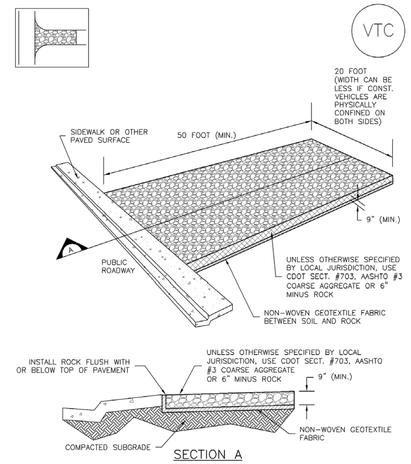

VTC-1. AGGREGATE VEHICLE TRACKING CONTROL

Silt Fence (SF) SC-1

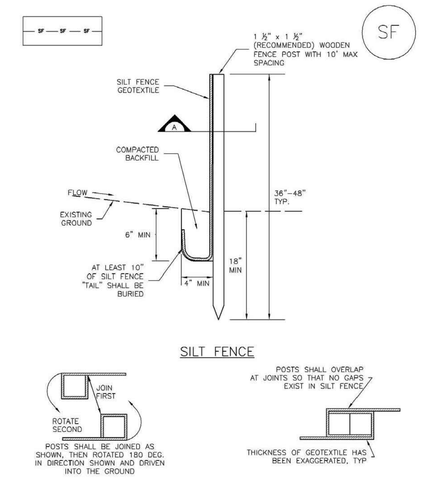

SF-1. SILT FENCE

NOT FOR CONSTRUCTION

NO.	DATE	REVISION	BY
DSGN	DR	CHK	APVD

PREPARED BY:
ENERTIA CONSULTING GROUP
1529 MARKET STREET, SUITE 200
DENVER, COLORADO 80202

PREPARED FOR:
Microgrid Energy
1536 WYNKOOP ST, SUITE 400
DENVER, COLORADO 80202

REUSE OF DOCUMENTS: THIS DOCUMENT, AND THE IDEAS AND DESIGNS INCORPORATED HEREIN, AS AN INSTRUMENT OF PROFESSIONAL SERVICE, IS THE PROPERTY OF ENERTIA CONSULTING GROUP AND IS NOT TO BE USED, IN WHOLE OR IN PART, FOR ANY OTHER PROJECT WITHOUT THE WRITTEN AUTHORIZATION OF ENERTIA CONSULTING GROUP.

KAMERRA 1 SOLAR GARDEN
CONDITIONAL USE PERMIT
ADAMS COUNTY, COLORADO

GESC DETAILS

VERIFY SCALE
BAR IS ONE INCH ON ORIGINAL DRAWING.
0 1"

DATE	09/12/2018
FILE	
DWG	
SHEET	7 OF 7

Q:\MICROGRID\KAMERRA - ADAMS COUNTY\07-CADD\SHEETS\C8 GESC DETAILS.DWG

CONDITIONAL USE PERMIT

MICROGRID - KAMERRA 2 SOLAR GARDEN

LOCATED IN THE SOUTHEAST QUARTER OF SECTION 18, TOWNSHIP 3 SOUTH, RANGE 64 WEST OF THE 6TH P.M.

COUNTY OF ADAMS, STATE OF COLORADO

VICINITY MAP

SCALE 1" = 3000'

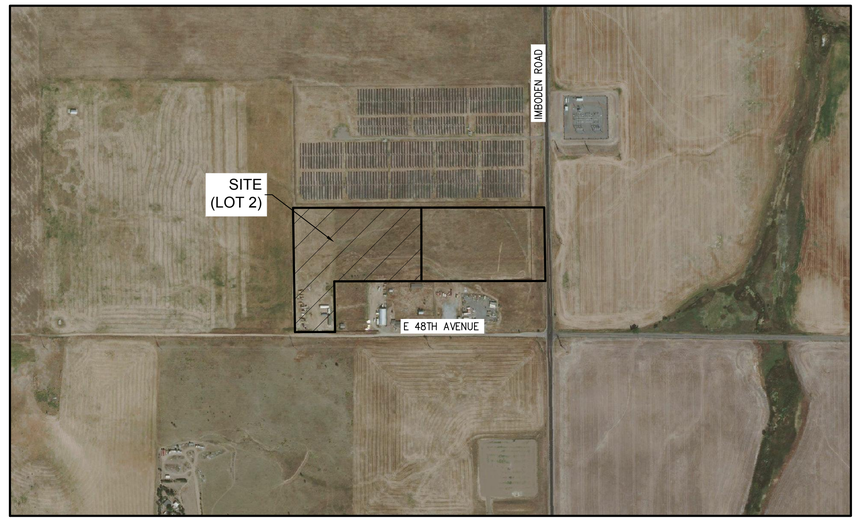

OVERALL SITE MAP

SCALE 1" = 500'

APPLICANT

MICROGRID ENERGY
1536 WYNKOOP STREET, SUITE 400
DENVER, COLORADO 80202
CONTACT: JON FITZPATRICK
(303) 506-7792

SURVEYOR

GREEN MOUNTAIN SURVERYING
1195 EDINBORO DR
BOULDER, CO 80305
CONTACT: SAMUEL KNIGHT
(970) 625-1330

ENGINEER

ENERTIA CONSULTING GROUP, LLC
1529 MARKET STREET, SUITE 200
DENVER, COLORADO 80202
CONTACT: SEAN O'HEARN, PE
(303) 473-3131

SITE DATA

EX ACCOUNT #: R0115201

EX PARCEL #: 0181700000325

PR ACCOUNT #: TBD

PR PARCEL # (LOT 1): TBD

PR PARCEL # (LOT 2): TBD

EX ZONE DISTRICT: A-3

PR ZONE DISTRICT (LOT 1 AND 2): A-2

EX PROPERTY AREA: 23.00 ACRES

PR. PROPERTY AREA (LOT 1): 11.50 ACRES

PR PROPERTY AREA (LOT 2): 11.00 ACRES

SOLAR GARDEN AREA (LOT 2): 7.82 ACRES

LOT COVERAGE (LOT 2): 2.70 ACRES

SYSTEM SIZE: 994.5 DC, 1.5 MW AC

TOTAL MODULES: 3,060 - CANADIAN SOLAR CS6X-325P 325 W MODULES OR SIMILAR EQUIPMENT

INVERTER: 15 - SOLECTRIA PVI 60TL 60KW INVERTERS OR SIMILAR EQUIPMENT

MOUNTING SYSTEM: ATI DURATRACK V3.0 SINGLE AXIS TRACKERS OR SIMILAR EQUIPMENT

LEGAL DESCRIPTION

A PORTION OF THAT PROPERTY DESCRIBED IN FIDELITY NATIONAL INSURANCE COMPANY TITLE REPORT NO.: F0600112-152-T56 DATED AUGUST 20, 2018.

LOT 8

A PART OF SOUTHERN HALF OF SECTION 18, TOWNSHIP 3 SOUTH, RANGE 64 WEST OF THE 6TH P.M., COUNTY OF ADAMS, STATE OF COLORADO, MORE PARTICULARLY DESCRIBED AS FOLLOWS:

COMMENCING AT THE SOUTHEAST CORNER OF SECTION 18, THENCE NORTH 00°17'44" WEST ALONG THE EAST LINE OF SAID SOUTHEAST ONE-QUARTER 30.00 FEET; THENCE NORTH 89°30'07" WEST PARALLEL WITH THE SOUTH LINE OF SAID SOUTHEAST ONE-QUARTER 30.00 FEET TO THE POINT OF INTERSECTION OF THE WEST RIGHT OF WAY LINE IMBODEN ROAD AND THE NORTH RIGHT OF WAY LINE EAST OF 48TH AVENUE AND THE POINT OF BEGINNING; THENCE CONTAINING NORTH 89°30'07" WEST ALONG SAID NORTH RIGHT OF WAY LINE OF EAST 48TH AVENUE, A DISTANCE OF 1753.36 FEET; THENCE NORTH 00°17'44" WEST, A DISTANCE OF 868.72 FEET; THENCE SOUTH 89°29'44" EAST, A DISTANCE OF 1755.37 FEET, THENCE SOUTH 00°17'44" EAST, A DISTANCE OF 868.53 FEET TO THE POINT OF BEGINNING.

EXCEPT

COMMENCING AT THE SOUTHEAST CORNER OF SAID SECTION 18; THENCE NORTH 00°18'17" WEST ALONG THE EAST LINE OF SAID SOUTHEAST ONE-QUARTER 30.00 FEET; THENCE NORTH 89°30'07" WEST PARALLEL WITH THE SOUTH LINE OF SAID SOUTHEAST ONE-QUARTER 30.00 FEET TO THE POINT OF BEGINNING, SAID POINT BEING ON THE WEST RIGHT OF WAY LINE OF IMBODEN ROAD AND ON THE NORTH RIGHT OF WAY LINE OF EAST 48TH AVENUE; THENCE CONTINUING NORTH 89°30'07" WEST ALONG SAID NORTH RIGHT OF WAY LINE OF EAST 48TH AVENUE 1475.00 FEET; THENCE NORTH 00°18'17" WEST PARALLEL WITH THE EAST LINE OF SAID SOUTHEAST ONE-QUARTER 354.42 FEET; THENCE SOUTH 89°30'07" EAST PARALLEL WITH THE SOUTH LINE OF SAID SOUTHEAST ONE QUARTER 1475.00 FEET TO A POINT BEING, A DISTANCE OF 30.00 FEET WEST OF THE EAST LINE OF SAID SOUTHEAST ONE-QUARTER; THENCE SOUTH 00°13'17" WEST PARALLEL WEST SAID EAST LINE 354.42 FEET TO THE POINT OF BEGINNING.

LEGAL DESCRIPTION OF PROPERTY TO BE SUBDIVIDED

A PARCEL OF LAND LOCATED WITHIN THE SOUTHEAST QUARTER OF SECTION 18, TOWNSHIP 3 SOUTH, RANGE 64 WEST, OF THE 6TH P.M. COUNTY OF ADAMS, STATE OF COLORADO, BEING MORE PARTICULARLY DESCRIBED AS FOLLOWS:

COMMENCING AT THE SOUTHEAST CORNER OF SAID SECTION 18, AND CONSIDERING THE SOUTH LINE OF THE SOUTHEAST QUARTER OF SAID SECTION 18 TO BEAR SOUTH 89°54'29" WEST, BETWEEN THE MONUMENT LOCATED AT SAID SOUTHEAST CORNER OF SAID SECTION 18, BEING A FOUND 3 1/4" ALUMINUM CAP "JR ENG" IN A RANGE BOX, AS SHOWN AND DESCRIBED HEREON, AND THE MONUMENT LOCATED ATT THE SOUTHWEST CORNER OF THE SOUTHEAST QUARTER OF SAID SECTION 18, BEING A FOUND 3 1/4" ALUMINUM CAP "ILLEGIBLE", AS SHOWN AND DESCRIBED HEREON; THENCE NORTH 00°53'39" WEST ALONG THE EAST LINE OF SAID SOUTHEAST QUARTER 30.00 FEET; THENCE SOUTH 89°54'29" WEST PARALLEL WITH THE SOUTH LINE OF SAID SOUTHEAST QUARTER 30.00 FEET TO THE POINT OF INTERSECTION OF TEH WEST RIGHT OF WAY LINE IMBODEN ROAD AND THE NORTH RIGHT OF WAY LINE OF EAST 48TH AVENUE AND THE POINT OF BEGINNING, BEING A FOUND 3/4" BRASS TAG "ILLEGIBLE", AS SHOWN AND DESCRIBED HEREON; THENCE CONTINUING SOUTH 89°54'29" WEST ALONG SAID NORTH RIGHT OF WAY LINE OF EAST 48TH AVENUE, A DISTANCE OF 1475.03 FEET MORE OR LESS TO THE SOUTHWEST CORNER OF THAT PARCEL DESCRIBED AS ADAMS COUNTY PARCEL NUMBER 0181700000291, BEING A FOUND #5 REBAR WITH A 1 1/2" YELLOW PLASTIC CAP LS 31158 AND THE POINT OF BEGINNING; THENCE CONTINUING SOUTH 89°54'29" WEST ALONG SAID NORTH RIGHT OF WAY LINE OF EAST 48TH AVENUE, A DISTANCE OF 280.39 FEET MORE OR LESS, TO A FOUND #5 REBAR WITH A 1 1/2" YELLOW PLASTIC CAP LS 31158, AS SHOWN AND DESCRIBED HEREON; THENCE LEAVING SAID RIGHT OF WAY NORTH 00°53'20" WEST, A DISTANCE OF 868.59 FEET MORE OR LESS TO A FOUND #5 REBAR WITH A 1 1/2" YELLOW PLASTIC CAP LS 31158, AS SHOWN AND DESCRIBED HEREON; THENCE NORTH 89°54'32" EAST, A DISTANCE OF 1755.34 FEET MORE OR LESS TO A FOUND #5 REBAR WITH A 1 1/2" YELLOW PLASTIC CAP LS 31158, AS SHOWN AND DESCRIBED HEREON, AND THE WEST RIGHT OF WAY LINE OF IMBODEN ROAD; THENCE SOUTH 00°53'39" EAST ALONG SAID WEST RIGHT OF WAY LINE OF IMBODEN RD, A DISTANCE OF 514.07 FEET MORE OR LESS TO THE NORTHEAST CORNER OF SAID PARCEL DESCRIBED AS ADAMS COUNTY PARCEL NUMBER 0181700000291, BEING A FOUND #5 REBAR WITH A 1 1/2" YELLOW PLASTIC CAP LS 31158, AS SHOWN AND DESCRIBED HEREON; THENCE SOUTH 89°54'10" WEST ALONG THE NORTH LINE OF SAID PARCEL DESCRIBED AS ADAMS COUNTY PARCEL NUMBER 0181700000291, A DSITANCE OF 1475.10 FEET MORE OR LESS TO THE NORTH WEST CORNER OF SAID PARCEL DESCRIBED AS ADAMS COUNTY PARCEL NUMBER 0181700000291, BEING FOUND A #5 REBAR WITH A 1 1/2" YELLOW PLASTIC CAP LS 31158, AS SHOWN AND DESCRIBED HEREON, THENCE SOUTH 00°54'19" EAST ALONG THE WEST LINE OF SAID PARCEL DESCRIBED AS ADAMS COUNTY PARCEL NUMBER 0181700000291, A DISTANCE OF 354.37 FEET MORE OR LESS TO THE POINT OF BEGINNING.

LEGEND

- PROPERTY BOUNDARY
- LEASE AREA BOUNDARY
- SETBACK
- EXISTING EASEMENT
- EXISTING EDGE OF PAVEMENT (EOP)
- SOLAR GARDEN PERIMETER FENCE
- SECTION LINE
- SOLAR PANELS
- PROPOSED 16' GRAVEL ACCESS DRIVEWAY
- PROPOSED CONCRETE
- 25' VEGETATION FREE BUFFER
- BENCHMARK

SHEET INDEX

SHEET #	DESCRIPTION
1	COVER SHEET
2	PLAT
3	PLAT
4	GESC PLAN
5	SITE PLAN
6	SITE DETAILS
7	GESC DETAILS

ADAMS COUNTY NOTE

PUBLIC IMPROVEMENTS SHALL CONFORM TO ADAMS COUNTY STANDARDS AND SPECIFICATIONS AND LATEST EDITION OF COLORADO DEPARTMENT OF TRANSPORTATION STANDARD SPECIFICATIONS

BENCHMARK

THE SOUTHWEST CORNER OF THE SOUTHEAST QUARTER OF SECTION 18, T3S, R64W. FOUND 3 $\frac{1}{4}$" ALUMINUM CAP "JR ENG" IN RANGE BOX PER MONUMENT RECORD DATED 8/31/08

FOR BURIED UTILITY INFORMATION
THREE (3) BUSINESS DAYS BEFORE YOU DIG
CALL 811
(OR 1-800-922-1987)
UTILITY NOTIFICATION CENTER OF COLORADO (UNCC)
WWW.UNCC.ORG

NOT FOR CONSTRUCTION

NO.	DATE	REVISION	BY
DSGN		DR	CHK	APVD

PREPARED BY:
ENERTIA CONSULTING GROUP
1529 MARKET STREET, SUITE 200
DENVER, COLORADO 80202

PREPARED FOR:
Microgrid Energy
1536 WYNKOOP ST, SUITE 400
DENVER, COLORADO 80202

REUSE OF DOCUMENTS: THIS DOCUMENT, AND THE IDEAS AND DESIGNS INCORPORATED HEREIN, AS AN INSTRUMENT OF PROFESSIONAL SERVICE, IS THE PROPERTY OF ENERTIA CONSULTING GROUP AND IS NOT TO BE USED, IN WHOLE OR IN PART, FOR ANY OTHER PROJECT WITHOUT THE WRITTEN AUTHORIZATION OF ENERTIA CONSULTING GROUP.

KAMERRA 2 SOLAR GARDEN
CONDITIONAL USE PERMIT
ADAMS COUNTY, COLORADO

COVER SHEET

VERIFY SCALE
BAR IS ONE INCH ON ORIGINAL DRAWING.
0 1"

DATE	09/12/2018
FILE	
DWG	
SHEET	1 OF 7

Q:\MICROGRID\KAMERRA - ADAMS COUNTY\07-CADD\SHEETS\LOT 2\1 COVER SHEET.DWG

CASE NO: PRC2018-00009

KAMERRA SUBDIVISION

A SUBDIVISION BEING A PORTION OF THE SOUTHEAST QUARTER OF SECTION 18, TOWNSHIP 3 SOUTH, RANGE 64 WEST OF THE 6TH P.M., COUNTY OF ADAMS, STATE OF COLORADO

SHEET 1 OF 2

OWNERSHIP AND DEDICATION CERTIFICATE:
KNOW ALL MEN BY THESE PRESENTS THAT KAMERRA, LLC, A COLORADO LIMITED LIABILITY COMPANY, BEING THE SOLE OWNER OF THE FOLLOWING DESCRIBED TRACT OF LAND:
A PORTION OF THAT PROPERTY DESCRIBED IN FIDELITY NATIONAL TITLE INSURANCE COMPANY TITLE REPORT NO.: F0600112-152-T56, DATED FEBRUARY 4, 2019.
LOT 8
A PART OF THE SOUTHERN HALF OF SECTION 18, TOWNSHIP 3 SOUTH, RANGE 64 WEST OF THE 6TH P.M., COUNTY OF ADAMS, STATE OF COLORADO, MORE PARTICULARLY DESCRIBED AS FOLLOWS:
COMMENCING AT THE SOUTHEAST CORNER OF SECTION 18; THENCE NORTH 00°17'44" WEST ALONG THE EAST LINE OF SAID SOUTHEAST ONE-QUARTER 30.00 FEET; THENCE NORTH 89°30'07" WEST PARALLEL WITH THE SOUTH LINE OF SAID SOUTHEAST ONE-QUARTER 30.00 FEET TO THE POINT OF INTERSECTION OF THE WEST RIGHT OF WAY LINE IMBODEN ROAD AND THE NORTH RIGHT OF WAY LINE OF EAST 48TH AVENUE AND THE POINT OF BEGINNING; THENCE CONTINUING NORTH 89°30'07" WEST ALONG SAID NORTH RIGHT OF WAY LINE OF EAST 48TH AVENUE, A DISTANCE OF 1753.36 FEET; THENCE NORTH 00°17'44" WEST, A DISTANCE OF 868.72 FEET; THENCE SOUTH 89°29'44"EAST, A DISTANCE OF 1755.37 FEET; THENCE SOUTH 00°17'44" EAST, A DISTANCE OF 868.53 FEET TO THE POINT OF BEGINNING;
EXCEPT
COMMENCING AT THE SOUTHEAST CORNER OF SAID SECTION 18; THENCE NORTH 00°18'17" WEST ALONG THE EAST LINE OF SAID SOUTHEAST ONE-QUARTER 30.00 FEET; THENCE NORTH 89°30'07" WEST PARALLEL WITH THE SOUTH LINE OF SAID SOUTHEAST ONE-QUARTER 30.00 FEET TO THE POINT OF BEGINNING, SAID POINT BEING ON THE WEST RIGHT OF WAY LINE OF IMBODEN ROAD AND ON THE NORTH RIGHT OF WAY LINE OF EAST 48TH AVENUE; THENCE CONTINUING NORTH 89°30'07" WEST ALONG SAID NORTH RIGHT OF WAY LINE OF EAST 48TH AVENUE 1475.00 FEET; THENCE NORTH 00°18_17_ WEST PARALLEL WITH THE EAST LINE OF SAID SOUTHEAST ONE-QUARTER 354.42 FEET; THENCE SOUTH 89°30'07" EAST PARALLEL WITH THE SOUTH LINE OF SAID SOUTHEAST ONE-QUARTER 1475.00 FEET TO A POINT BEING, A DISTANCE OF 30.00 FEET WEST OF THE EAST LINE OF SAID SOUTHEAST ONE-QUARTER; THENCE SOUTH 00°13'17" WEST PARALLEL WEST SAID EAST LINE 354.42 FEET TO THE POINT OF BEGINNING.

ALSO DESCRIBED AS:
A PARCEL OF LAND LOCATED WITHIN THE SOUTHEAST QUARTER OF SECTION 18, TOWNSHIP 3 SOUTH, RANGE 64 WEST, OF THE 6TH P.M. COUNTY OF ADAMS, STATE OF COLORADO, BEING MORE PARTICULARITY DESCRIBED AS FOLLOWS:
COMMENCING AT THE SOUTHEAST CORNER OF SAID SECTION 18, AND CONSIDERING THE SOUTH LINE OF THE SOUTHEAST QUARTER OF SAID SECTION 18 TO BEAR SOUTH 89°54'29" WEST, BETWEEN THE MONUMENT LOCATED AT SAID SOUTHEAST CORNER OF SAID SECTION 18, BEING A FOUND 3 1/4" ALUMINUM CAP "JR ENG" IN A RANGE BOX, AS SHOWN AND DESCRIBED HEREON, AND THE MONUMENT LOCATED AT THE SOUTHWEST CORNER OF THE SOUTHEAST QUARTER OF SAID SECTION 18, BEING A FOUND 3 1/4" ALUMINUM CAP "ILLEGIBLE", AS SHOWN AND DESCRIBED HEREON; THENCE NORTH 00°53'39" WEST ALONG THE EAST LINE OF SAID SOUTHEAST QUARTER 30.00 FEET; THENCE SOUTH 89°54'29" WEST PARALLEL WITH THE SOUTH LINE OF SAID SOUTHEAST QUARTER 30.00 FEET TO THE POINT OF INTERSECTION OF THE WEST RIGHT OF WAY LINE IMBODEN ROAD AND THE NORTH RIGHT OF WAY LINE OF EAST 48TH AVENUE, BEING A FOUND 3/4" BRASS TAG "ILLEGIBLE", AS SHOWN AND DESCRIBED HEREON; THENCE CONTINUING SOUTH 89°54'29" WEST ALONG SAID NORTH RIGHT OF WAY LINE OF EAST 48TH AVENUE, A DISTANCE OF 1475.03 FEET MORE OR LESS TO THE SOUTHWEST CORNER OF THAT PARCEL DESCRIBED IN ADAMS COUNTY RECEPTION NUMBER 2004000058830, BEING A FOUND #5 REBAR WITH A 1 1/2" YELLOW PLASTIC CAP LS 31158 AND THE POINT OF BEGINNING; THENCE CONTINUING SOUTH 89°54'29" WEST ALONG SAID NORTH RIGHT OF WAY LINE OF EAST 48TH AVENUE, A DISTANCE OF 280.39 FEET MORE OR LESS, TO A FOUND #5 REBAR WITH A 1 1/2" YELLOW PLASTIC CAP LS 31158, AS SHOWN AND DESCRIBED HEREON; THENCE LEAVING SAID RIGHT OF WAY NORTH 00°53'20" WEST, A DISTANCE OF 868.59 FEET MORE OR LESS TO A FOUND #5 REBAR WITH A 1 1/2" YELLOW PLASTIC CAP LS 31158, AS SHOWN AND DESCRIBED HEREON; THENCE NORTH 89°54'32" EAST, A DISTANCE OF 1755.34 FEET MORE OR LESS TO A FOUND #5 REBAR WITH A 1 1/2" YELLOW PLASTIC CAP LS 31158, AS SHOWN AND DESCRIBED HEREON, AND THE WEST RIGHT OF WAY LINE OF IMBODEN ROAD; THENCE SOUTH 00°53'39" EAST ALONG SAID WEST RIGHT OF WAY LINE OF IMBODEN ROAD, A DISTANCE OF 514.07 FEET MORE OR LESS TO THE NORTHEAST CORNER OF SAID PARCEL DESCRIBED IN ADAMS COUNTY RECEPTION NUMBER 2004000058830, BEING A FOUND #5 REBAR WITH A 1 1/2" YELLOW PLASTIC CAP LS 31158, AS SHOWN AND DESCRIBED HEREON; THENCE SOUTH 89°54'10" WEST ALONG THE NORTH LINE OF SAID PARCEL DESCRIBED IN ADAMS COUNTY RECEPTION NUMBER 2004000058830, A DISTANCE OF 1475.10 FEET MORE OR LESS TO THE NORTH WEST CORNER OF SAID PARCEL DESCRIBED IN ADAMS COUNTY RECEPTION NUMBER 2004000058830, BEING A FOUND #5 REBAR WITH A 1 1/2" YELLOW PLASTIC CAP LS 31158, AS SHOWN AND DESCRIBED HEREON; THENCE SOUTH 00°54'19" EAST ALONG THE WEST LINE OF SAID PARCEL DESCRIBED IN ADAMS COUNTY RECEPTION NUMBER 2004000058830, A DISTANCE OF 354.37 FEET MORE OR LESS TO THE POINT OF BEGINNING.

HAS BY THESE PRESENTS LAID OUT, PLATTED AND SUBDIVIDED THE SAME INTO LOTS, STREETS AND EASEMENTS AS SHOWN ON THIS PLAT UNDER THE NAME AND STYLE OF KAMERRA SUBDIVISION. ALL PUBLIC STREETS ARE HEREBY DEDICATED TO ADAMS COUNTY FOR PUBLIC USE. THE UNDERSIGNED DOES HEREBY DEDICATE, GRANT AND CONVEY TO ADAMS COUNTY THOSE PUBLIC EASEMENTS AS SHOWN ON THE PLAT; AND FURTHUR RESTRICTS THE USE OF ALL PUBLIC EASEMENTS TO ADAMS COUNTY AND/OR ITS ASSIGNS, PROVIDED HOWEVER, THAT THE SOLE RIGHT AND AUTHORITY TO RELAEASE OR QUITCLAIM ALL OR ANY SUCH EASEMENTS SHALL REMAIN EXCLUSIVELY VESTED IN ADAMS COUNTY.

EXCECUTED THIS _____DAY OF _____A.D., 20_____
BY: KAMERRA, LLC, A COLORADO LIMITED LIABILITY COMPANY

_____
ALLEN STUBBS, MANAGER
ON THE BEHALF OF KAMERRA LLC

STATE OF COLORADO)
)SS
COUNTY OF ADAMS)

THE FORGOING INSTRUMENT WAS ACKNOWLEDGED BY ME THIS_____ DAY OF_____

A.D., 20_____

BY:_____AS_____OF KAMERRA, LLC, A COLORADO LIMITED LIABILITY COMPANY

WITNESS MY HAND AND SEAL. MY COMMISION EXPIRES _____

MY ADDRESS IS _____
_____

_____
NOTARY PUBLIC

VICINITY MAP
NOT TO SCALE

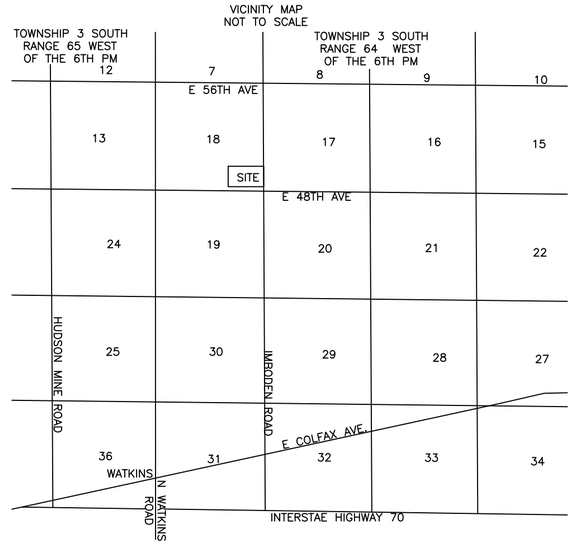

NOTES:

1) FIDELITY NATIONAL TITLE INSURANCE COMPANY REPORT NO.: F0600112-152-T56, DATED FEBRUARY 4, 2019, WAS RELIED UPON FOR RECORDED INFORMATION PERTAINING TO RIGHTS-OF-WAY, EASEMENTS AND ENCUMBRANCES IN THE PREPARATION OF THIS SUBDIVISION PLAT.

2) ACCORDING TO COLORADO LAW, YOU MUST COMMENCE ANY LEGAL ACTION BASED UPON ANY DEFECT OR EVIDENCE OF NEGLIGENCE IN THIS SURVEY WITHIN THREE YEARS AFTER YOU FIRST DISCOVER SUCH DEFECT. IN NO EVENT MAY ANY ACTION BASED UPON ANY DEFECT OR EVIDENCE OF NEGLIGENCE IN THIS SURVEY BE COMMENCED MORE THAN TEN YEARS FROM THE DATE OF THE CERTIFICATION SHOWN HEREON.

3) THE DISTANCE MEASUREMENTS SHOWN HEREON ARE THE U.S. SURVEY FOOT.

4) THIS SUBDIVISION PLAT IS VALID ONLY IF PRINT HAS ORIGINAL SEAL AND SIGNATURE OF SURVEYOR.

5) BASIS OF BEARINGS: GPS DERIVED BASED ON COLORADO STATE PLANE NORTH ZONE 0501, NAD83 (2011), GEOID12A, BEING SOUTH 89°54'29" WEST BETWEEN THE MONUMENT LOCATED AT THE SOUTHWEST CORNER, OF THE SOUTHEAST QUARTER, OF SECTION 18, TOWNSHIP 3 SOUTH , RANGE 64 WEST, OF THE 6TH P.M., BEING A FOUND 3 1/4" ALUMINUM CAP "JR ENG" IN A RANGE BOX AS SHOWN AND DESCRIBED HEREON, AND THE MONUMENT LOCATED AT THE THE SOUTHWEST CORNER, OF THE SOUTHEAST QUARTER, OF SAID SECTION 18, BEING A FOUND 3 1/4" ALUMINUM CAP ON 1" AXLE ±1' DOWN AS SHOWN AND DESCRIBED HEREON. WITH ALL OTHER BEARINGS AND DISTANCES SHOWN HEREON RELATED THERETO.

6) THE TOTAL AREA OF THE PROPERTY TO BE SUBDIVIDED IS 1001773 SQ. FEET OR 23.00 ACRES MORE OR LESS.

7) SIX-FOOT (6') WIDE UTILITY EASEMENTS ARE HEREBY DEDICATED ON PRIVATE PROPERTY ADJACENT TO THE FRONT LOT LINES OF EACH LOT IN THE SUBDIVISION. IN ADDITION, EIGHT-FOOT (8_) WIDE DRY UTILITY EASEMENTS ARE HEREBY DEDICATED AROUND THE PERIMETER OF TRACTS, PARCELS AND/OR OPEN SPACE AREAS. THESE EASEMENTS ARE DEDICATED TO ADAMS COUNTY FOR THE BENEFIT OF THE APPLICABLE UTILITY PROVIDERS FOR THE INSTALLATION, MAINTENANCE, AND REPLACEMENT OF UTILITIES. UTILITY EASEMENTS SHALL ALSO BE GRANTED WITHIN ANY ACCESS EASEMENTS AND PRIVATE STREETS IN THE SUBDIVISION. PERMANENT STRUCTURES, IMPROVEMENTS, OBJECTS, BUILDINGS, WELLS, WATER METERS AND OTHER OBJECTS THAT MAY INTERFERE WITH THE UTILITY FACILITIES OR USE THEREOF (INTERFERING OBJECTS) SHALL NOT BE PERMITTED WITHIN SAID UTILITY EASEMENTS AND THE UTILITY PROVIDERS, AS GRANTEES, MAY REMOVE ANY INTERFERING OBJECTS AT NO COST TO SUCH GRANTEES, INCLUDING, WITHOUT LIMITATION, VEGETATION.

8) THE POLICY OF THE COUNTY REQUIRES THAT MAINTENANCE ACCESS SHALL BE PROVIDED TO ALL STORM DRAINAGE FACILITIES TO ASSURE CONTINUOUS OPERATIONAL CAPABILITY OF THE SYSTEM. THE PROPERTY OWNERS SHALL BE RESPONSIBLE FOR THE MAINTENANCE OF ALL DRAINAGE FACILITIES INCLUDING INLETS, PIPES, CULVERTS, CHANNELS, DITCHES, HYDRAULIC STRUCTURES, AND DETENTION BASINS LOCATED ON THEIR LAND UNLESS MODIFIED BY THE SUBDIVISION DEVELOPMENT AGREEMENT. SHOULD THE OWNER FAIL TO MAINTAIN SAID FACILITIES, THE COUNTY SHALL HAVE THE RIGHT TO ENTER SAID LAND FOR THE SOLE PURPOSE OF OPERATIONS AND MAINTENANCE. ALL SUCH MAINTENANCE COST WILL BE ASSESSED TO THE PROPERTY OWNERS.

9) CONTRACTOR IS REQUIRED TO INSTALL AND MAINTAIN CONSTRUCTION BMPS ACCORDING TO THE CONDITIONALLY ACCEPTED GESC PLAN AND BMP DETAIL DRAWINGS AND ENSURE THEY ARE IN EFFECTIVE WORKING CONDITION TO FUNCTION AS DESIGNED UNTIL THE COMPLETION OF CONSTRUCTION. BMPS ARE TO BE INSTALLED AND MAINTAINED IN ACCORDANCE WITH THE URBAN DRAINAGE AND FLOOD CONTROL DISTRICT'S URBAN STORM DRAINAGE CRITERIA MANUAL, VOLUME 3.

10) FLOOD INSURANCE RATE MAP, FIRM PANEL # (08001C0690H), FEDERAL EMERGENCY MANAGEMENT AGENCY, JANUARY 20, 2016. ACCORDING TO THE ABOVE REFERENCE, THE PROJECT SITE IS NOT LOCATED WITHIN A DELINEATED 100-YEAR FLOOD HAZARD ZONE; A FLOODPLAIN USE PERMIT WILL NOT BE REQUIRED

NOTES CONTINUED:

11) A 42' WIDE PORTION OF THE PROPERTY TO BE SUBDIVIDED IS TO BE DEDICATED TO THE COUNTY OF ADAMS AS A PORTION OF IMBODEN ROAD RIGHT OF WAY BY THIS PLAT.

12) THE DRAINAGE EASEMENT ADAMS COUNTY RECEPTION NUMBER C1025627 DOES NOT APPEAR TO AFFECT THE SUBJECT PROPERTY AND THEREFOR HAS NOT BEEN SHOWN HEREON.

ATTORNEY'S CERTIFICATE

I_____, AN ATTORNEY AT LAW DULY LICENSED TO PRACTICE BEFORE THE COURTS OF RECORD OF COLORADO, DO HEREBY CERTIFY THAT I HAVE EXAMINED THE TITLE OF ALL LANDS HEREIN ABOVE INDICATED AND SHOWN UPON THE WITHIN PLATS PUBLIC WAYS AND EASEMENTS AND THAT TITLE TO SUCH LAND IS IN THE DEDICATOR'S, FREE AND CLEAR OF ALL LIENS AND ENCUMBRANCES OF RECORD.

DATED THIS ____DAY OF _____, 20____.

_____
COUNTY ATTORNEY

BOARD OF COUNTY COMMISSIONERS

APPROVED BY THE ADAMS COUNTY BOARD OF COMMISSIONERS THIS _____DAY OF

_____A.D., 20_____

_____
CHAIR

CLERK AND RECORDER'S CERTIFICATE:

THIS PLAT FILED FOR RECORD IN THE OFFICE OF ADAMS COUNTY CLERK AND RECORDER,

IN THE STATE OF COLROADO, AT_____:_____ ____.M. ON THE _____DAY OF

_____A.D., 20_____

_____
COUNTY CLERK AND RECORDER

BY:_____
DEPUTY

RECEPTION NO._____

SURVEYOR'S STATEMENT:

I, SAMUEL A. KNIGHT, A DULY REGISTERED LAND SURVEYOR, LICENSED IN THE STATE OF COLORADO, HEREBY STATE FOR AND ON THE BEHALF OF GREEN MOUNTAIN SURVEYING, THAT A SURVEY OF THE ABOVE DESCRIBED PREMISES WAS CONDUCTED BY ME, AND THAT SAID SURVEY AND THE ATTACHED SUBDIVISION PLAT ARE ACCURATE TO THE BEST OF KNOWLEDGE, INFORMATION, AND BELIEF.

DRAFT COPY FOR YOUR REVIEW AND COMMENT

_____ _____
SAMUEL A KNIGHT DATE
CO PLS 38127 KAMERRA SUBDIVISION
GREEN MOUNTAIN SURVEYING
BOULDER CO, 80305
303-601-8588

COPYRIGHT GREEN MOUNTAIN SURVEYING 2019

KAMERRA SUBDIVISION

A SUBDIVISION BEING A PORTION OF THE SOUTHEAST QUARTER OF SECTION 18, TOWNSHIP 3 SOUTH, RANGE 64 WEST OF THE 6TH P.M., COUNTY OF ADAMS, STATE OF COLORADO

SHEET 2 OF 2

CASE NO: PRC2018-00009

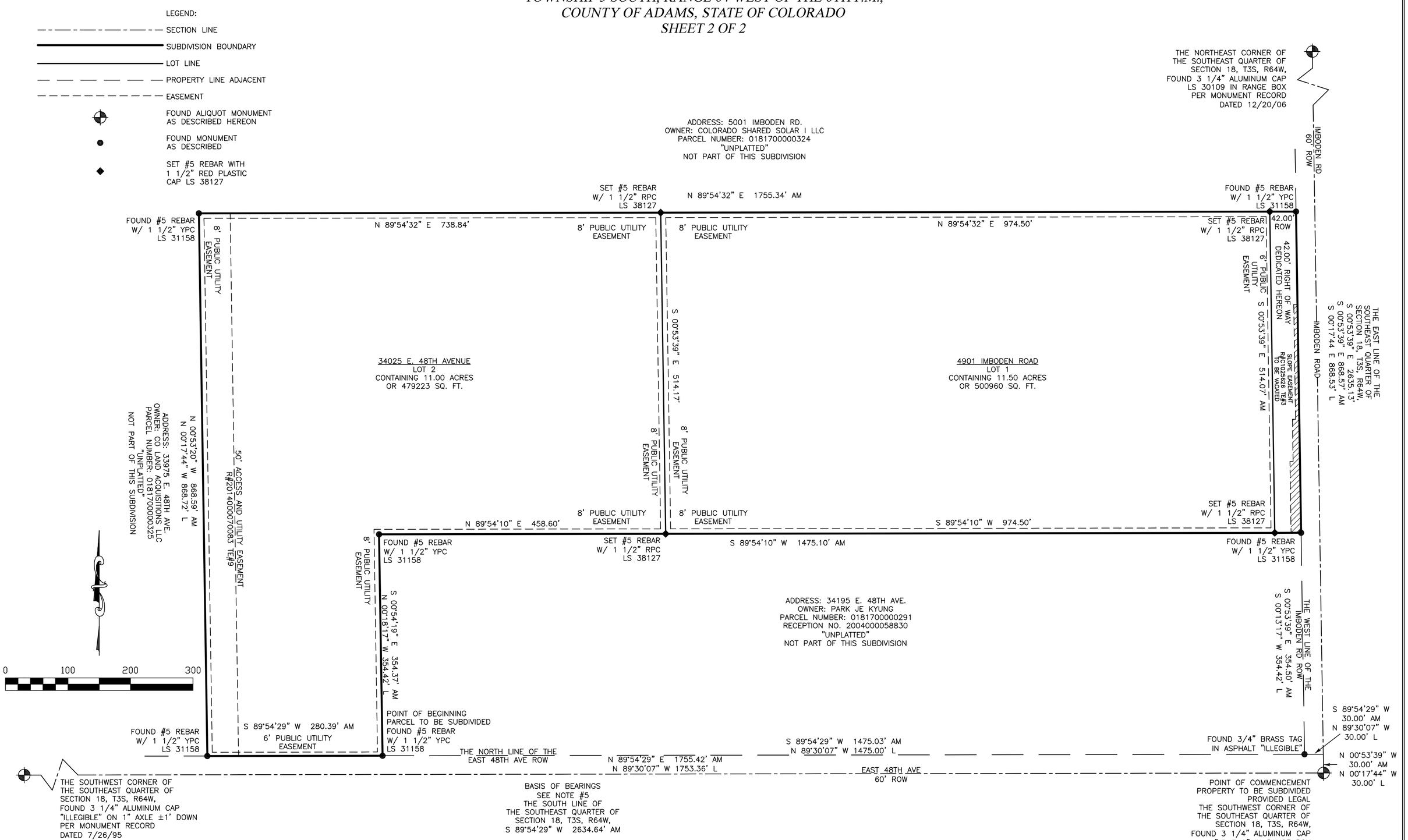

DRAFT COPY FOR YOUR REVIEW AND COMMENT

LEGEND

- PROPERTY BOUNDARY
- LIMITS OF CONSTRUCTION
- LEASE AREA BOUNDARY
- SF — SF — SF — SF — SILT FENCE
- EXISTING EASEMENT
- EDGE OF PAVEMENT (EOP)
- x — x — SOLAR GARDEN PERIMETER FENCE
- x — x — EX CEDAR FENCE
- PROPOSED 16' GRAVEL ACCESS DRIVEWAY
- PROPOSED CONCRETE
- FLOW DIRECTION ARROW
- SECTION LINE
- SOLAR PANELS

EROSION & SEDIMENT CONTROL LEGEND

SILT FENCE OR ALTERNATIVE SEDIMENT CONTROL LOG	SF 1	SF
VEHICLE TRACKING CONTROL	VTC 1	
CONCRETE WASHOUT AREA	CWA 1	

EROSION & SEDIMENT CONTROL NOTES

- CONTRACTOR MUST ADHERE TO THE SWMP AND GESC PREPARED FOR THIS PROJECT. CONTRACT MUST ALSO KEEP COPIES OF THE SWMP AND GESC PLANS ON SITE THROUGH OUT THE DURATION OF THE PROJECT.

SUMMARY OF WORK

INITIAL PHASE

- MOBILIZATION AND SET UP OF THE CONSTRUCTION SITE.
- INSTALLATION OF INITIAL BMP'S

INTERIM PHASE

- OVERLOT GRADING OF THE DRIVEWAY
- INSTALLATION OF INTERIM BMPS
- UTILITY INSTALLATION.
- DISTURBED SURFACES SHALL BE STABILIZED IF THEY ARE INACTIVE FOR A PERIOD OF 30 DAYS OR LONGER. APPROXIMATE STABILIZATION METHODS SUCH AS SEEDING, MULTCHING OR OTHER METHODS RECOMMENDED IN VOLUME 3 OF THE UDFCD MANUAL MAY BE USED.

FINAL PHASE

- REMOVE TEMPORARY EROSION AND SEDIMENT CONTROL BMPs.
  - PERIMETER SEDIMENT CONTROLS MUST REMAIN IN PLACE UNTIL 70 PERCENT VEGETATION IS ESTABLISHED FOR ALL OF THE DISTURBED AREAS.

NOTES

1. EQUIPMENT PAD TYPICALLY INCLUDES AC COMBINER PANEL, AC SWITCHGER, LOW VOLTAGE PANEL, ZIG ZAG TRANSFORMER, PRODUCTION METER, AC DISCONNECT, LOCKING BILLING METER, DAS, POCC.
2. LOCATION OF EXISTING UTILITIES SHALL BE VERIFIED BY CONTRACTOR PRIOR TO CONSTRUCTION. CONTRACTOR SHALL BE RESPONSIBLE FOR LOCATION, SUPPORT, PROTECTION, AND RESTORATION OF ALL EXISTING UTILITIES AND APPURTENANCES, WHETHER SHOWN OR NOT SHOWN ON THE APPROVED CONSTRUCTION DOCUMENTS.
3. PROVIDING NOTIFICATION AND RECEIVING MARKINGS OF UNDERGROUND MEMBER UTILITIES IN NO WAY CONSTITUTES PERMISSION TO PERFORM CONSTRUCTION.
4. THE CONTRACTOR SHALL BE RESPONSIBLE FOR THE LOCATION, PROTECTION, AND REPAIR OF ALL UTILITIES ENCOUNTERED DURING CONSTRUCTION, WHETHER SHOWN ON THESE PLANS OR NOT. THE CONTRACTOR SHALL CONTACT ALL RESPECTIVE UTILITIES AND HAVE ALL UTILITIES FIELD LOCATED PRIOR TO CONSTRUCTION. IT SHALL BE THE CONTRACTORS RESPONSIBILITY TO VERIFY THE LOCATION OF ALL EXISTING STRUCTURES AND UTILITIES SHOWN ON THE DRAWINGS, TO ASCERTAIN WHETHER ANY STRUCTURES AND UTILITIES MAY EXIST, AND TO REPAIR OR REPLACE ANY STRUCTURES AND UTILITIES THAT MIGHT BE DAMAGED.
5. LOCATIONS OF UTILITIES REPRESENT THE BEST KNOWN LOCATIONS AT THE TIME OF PREPARATION OF DRAWINGS. THE CONTRACTOR SHALL FIELD LOCATE ALL UTILITIES IN ADVANCE OF EXCAVATION. RELOCATION OF UTILITIES IS NOT ANTICIPATED FOR THIS PROJECT. IF REQUIRED, THE CONTRACTOR SHALL COOPERATE WITH COMPANIES TRYING TO COORDINATE THE RELOCATION EFFORT. LINES NOT RELOCATED SHALL BE PROTECTED BY THE CONTRACTOR. NO ADDITIONAL PAYMENT WILL BE ALLOWED FOR THE MINOR ADJUSTMENT OF STRUCTURES IN ORDER TO CLEAR A CONFLICTING UTILITY.
6. THERE ARE NO PROPOSED GRADING ACTIVITIES WITH KAMERRA 2 SOLAR GARDEN PROJECT. IT IS ANTICIPATED THAT THE PV ARRAYS CAN BE SITED AT EXISTING GRADE.
7. TREES AND SHRUBS ARE NOT OBSERVED WITHIN THE PV ARRAY AREAS. TREES AND SHRUBS ARE TO BE REMOVED AS NECESSARY TO ALLOW FOR THE INSTALLATION OF THE ARRAYS AND TO ELIMINATE SHADING.
8. CONTRACTOR IS REQUIRED TO INSTALL AND MAINTAIN CONSTRUCTION BMPS ACCORDING TO THE CONDITIONALLY ACCEPTED GESC PLAN AND BMP DETAIL DRAWINGS AND ENSURE THEY ARE IN EFFECTIVE WORKING CONDITION TO FUNCTION AS DESIGNED UNTIL THE COMPLETION OF CONSTRUCTION. BMPS ARE TO BE INSTALLED AND MAINTAINED IN ACCORDANCE WITH THE URBAN DRAINAGE AND FLOOD CONTROL DISTRICT'S URBAN STORM DRAINAGE CRITERIA MANUAL, VOLUME 3.

0' 30' 60' 120'
SCALE: 1"=60'

N

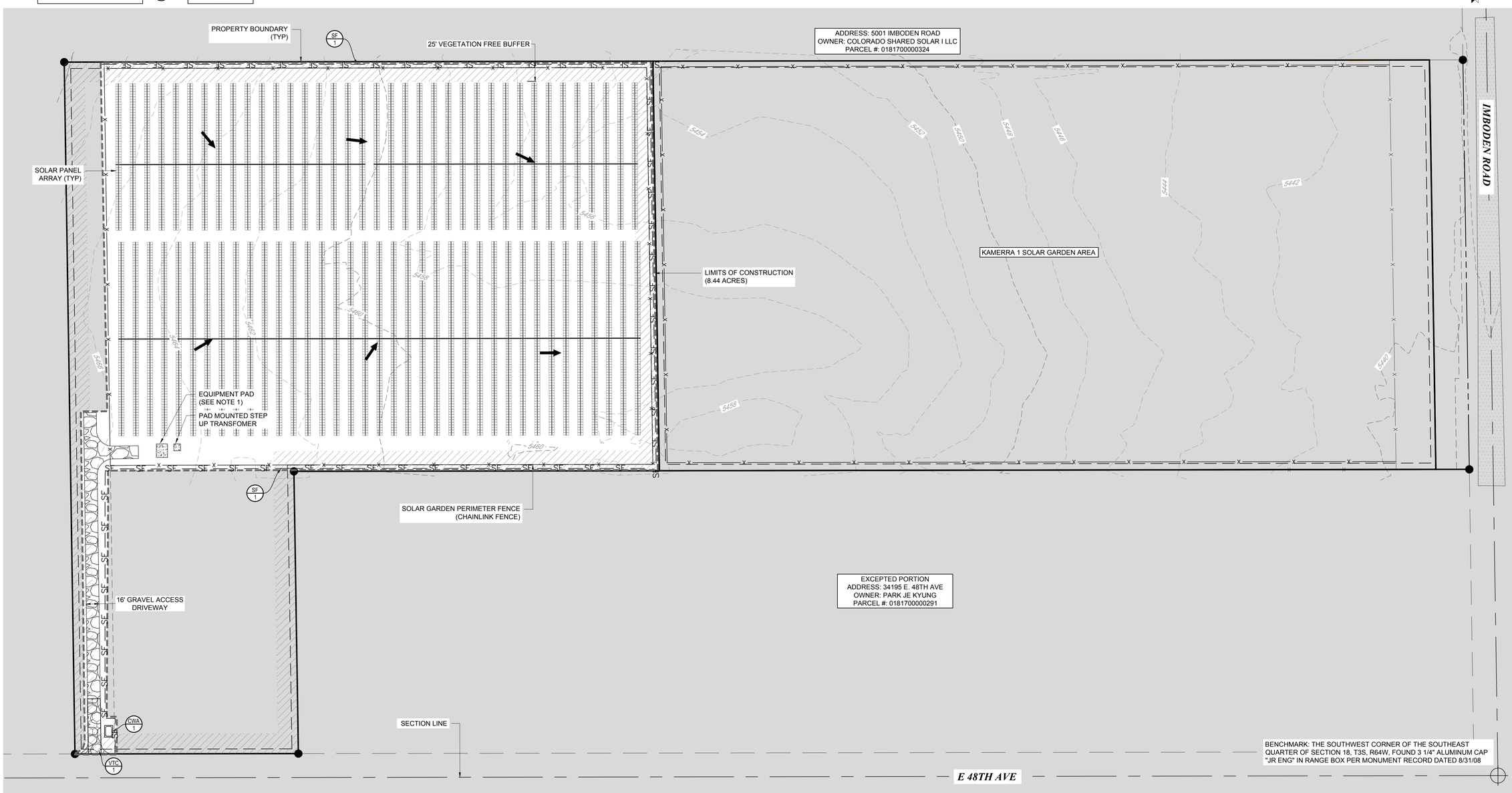

NOT FOR CONSTRUCTION

NO.	DATE	REVISION	BY
DSGN	DR	CHK	APVD

PREPARED BY:
ENERTIA CONSULTING GROUP
1529 MARKET STREET, SUITE 200
DENVER, COLORADO 80202

PREPARED FOR:
Microgrid Energy
1536 WYNKOOP ST, SUITE 400
DENVER, COLORADO 80202

REUSE OF DOCUMENTS: THIS DOCUMENT, AND THE IDEAS AND DESIGNS INCORPORATED HEREIN, AS AN INSTRUMENT OF PROFESSIONAL SERVICE, IS THE PROPERTY OF ENERTIA CONSULTING GROUP AND IS NOT TO BE USED, IN WHOLE OR IN PART, FOR ANY OTHER PROJECT WITHOUT THE WRITTEN AUTHORIZATION OF ENERTIA CONSULTING GROUP.

KAMERRA 2 SOLAR GARDEN CONDITIONAL USE PERMIT

ADAMS COUNTY, COLORADO

GRADING & EROSION CONTROL PLAN

VERIFY SCALE

BAR IS ONE INCH ON ORIGINAL DRAWING.
0 1"

DATE	09/12/2018
FILE	
DWG	
SHEET	4 OF 7

Q:\MICROGRID\KAMERRA - ADAMS COUNTY\07-CADD\SHEETS\LOT 2\3 GESC PLAN.DWG

LEGEND

- PROPERTY BOUNDARY
- LEASE AREA BOUNDARY
- SETBACK
- EXISTING EASEMENT
- EDGE OF PAVEMENT (EOP)
- SOLAR GARDEN PERIMETER FENCE (CHAINLINK)
- EX FENCE (CEDAR)
- SECTION LINE
- SOLAR PANEL ARRAY
- PROPOSED 16' GRAVEL ACCESS DRIVEWAY
- PROPOSED CONCRETE
- 25' VEGETATION FREE BUFFER
- BENCHMARK

0' 30' 60' 120'
SCALE: 1"=60'

N

NOTES

1. EQUIPMENT PAD TYPICALLY INCLUDES AC COMBINER PANEL, AC SWITCHGER, LOW VOLTAGE PANEL, ZIG ZAG TRANSFORMER, PRODUCTION METER, AC DISCONNECT, LOCKING BILLING METER, DAS, POCC.
2. LOCATION OF EXISTING UTILITIES SHALL BE VERIFIED BY CONTRACTOR PRIOR TO CONSTRUCTION. CONTRACTOR SHALL BE RESPONSIBLE FOR LOCATION, SUPPORT, PROTECTION, AND RESTORATION OF ALL EXISTING UTILITIES AND APPURTENANCES, WHETHER SHOWN OR NOT SHOWN ON THE APPROVED CONSTRUCTION DOCUMENTS.
3. PROVIDING NOTIFICATION AND RECEIVING MARKINGS OF UNDERGROUND MEMBER UTILITIES IN NO WAY CONSTITUTES PERMISSION TO PERFORM CONSTRUCTION.
4. THE CONTRACTOR SHALL BE RESPONSIBLE FOR THE LOCATION, PROTECTION, AND REPAIR OF ALL UTILITIES ENCOUNTERED DURING CONSTRUCTION, WHETHER SHOWN ON THESE PLANS OR NOT. THE CONTRACTOR SHALL CONTACT ALL RESPECTIVE UTILITIES AND HAVE ALL UTILITIES FIELD LOCATED PRIOR TO CONSTRUCTION. IT SHALL BE THE CONTRACTORS RESPONSIBILITY TO VERIFY THE LOCATION OF ALL EXISTING STRUCTURES AND UTILITIES SHOWN ON THE DRAWINGS, TO ASCERTAIN WHETHER ANY STRUCTURES AND UTILITIES MAY EXIST, AND TO REPAIR OR REPLACE ANY STRUCTURES AND UTILITIES THAT MIGHT BE DAMAGED.
5. LOCATIONS OF UTILITIES REPRESENT THE BEST KNOWN LOCATIONS AT THE TIME OF PREPARATION OF DRAWINGS. THE CONTRACTOR SHALL FIELD LOCATE ALL UTILITIES IN ADVANCE OF EXCAVATION. RELOCATION OF UTILITIES IS NOT ANTICIPATED FOR THIS PROJECT. IF REQUIRED, THE CONTRACTOR SHALL COOPERATE WITH COMPANIES TRYING TO COORDINATE THE RELOCATION EFFORT. LINES NOT RELOCATED SHALL BE PROTECTED BY THE CONTRACTOR. NO ADDITIONAL PAYMENT WILL BE ALLOWED FOR THE MINOR ADJUSTMENT OF STRUCTURES IN ORDER TO CLEAR A CONFLICTING UTILITY.
6. THERE ARE NO PROPOSED GRADING ACTIVITIES WITH KAMERRA 2 SOLAR GARDEN PROJECT. IT IS ANTICIPATED THAT THE PV ARRAYS CAN BE SITED AT EXISTING GRADE.
7. TREES AND SHRUBS ARE NOT OBSERVED WITHIN THE PV ARRAY AREAS. TREES AND SHRUBS ARE TO BE REMOVED AS NECESSARY TO ALLOW FOR THE INSTALLATION OF THE ARRAYS AND TO ELIMINATE SHADING.

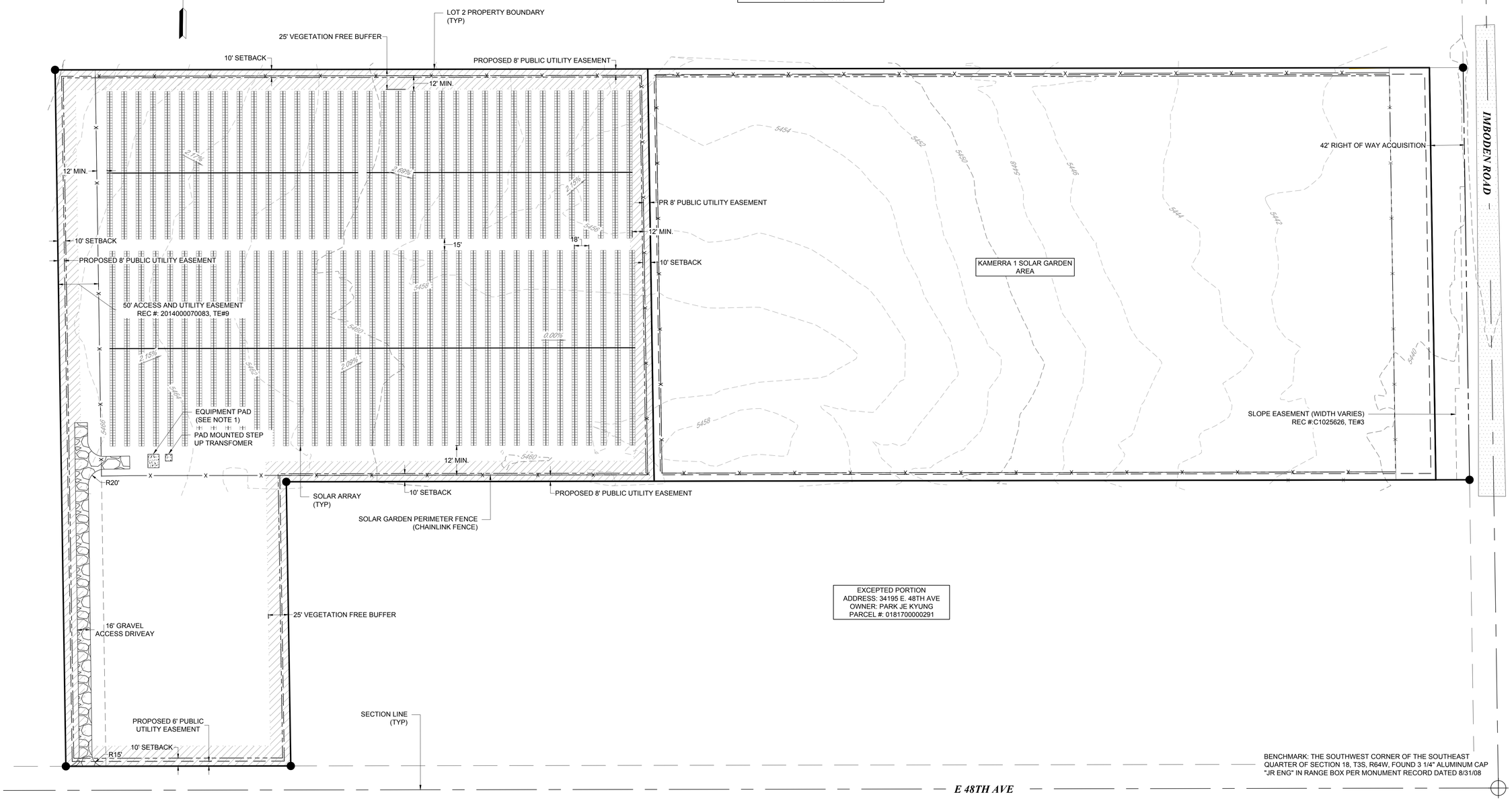

NOT FOR CONSTRUCTION

NO.	DATE	REVISION	BY
DSGN	DR	CHK	APVD

PREPARED BY:
ENERTIA CONSULTING GROUP
1529 MARKET STREET, SUITE 200
DENVER, COLORADO 80202

PREPARED FOR:
Microgrid Energy
1536 WYNKOOP ST, SUITE 400
DENVER, COLORADO 80202

REUSE OF DOCUMENTS: THIS DOCUMENT, AND THE IDEAS AND DESIGNS INCORPORATED HEREIN, AS AN INSTRUMENT OF PROFESSIONAL SERVICE, IS THE PROPERTY OF ENERTIA CONSULTING GROUP AND IS NOT TO BE USED, IN WHOLE OR IN PART, FOR ANY OTHER PROJECT WITHOUT THE WRITTEN AUTHORIZATION OF ENERTIA CONSULTING GROUP.

KAMERRA 2 SOLAR GARDEN CONDITIONAL USE PERMIT
ADAMS COUNTY, COLORADO

SITE PLAN

VERIFY SCALE
BAR IS ONE INCH ON ORIGINAL DRAWING
0 1"

DATE	09/12/2018
FILE	
DWG	
SHEET	5 OF 7

Q:\MICROGRID\KAMERRA - ADAMS COUNTY\07-CADD\SHEETS\LOT 2\4 SITE PLAN.DWG

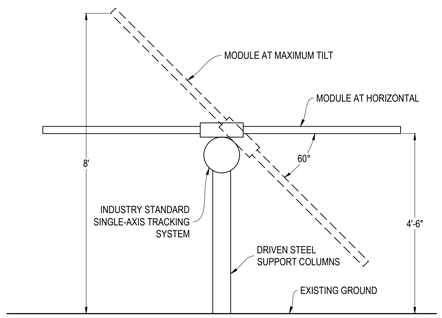

NOTE: FINAL DIMENSIONS SUBJECT TO FINAL DESIGN.

TYPICAL PV ARRAY RACKING SYSTEM

NOT TO SCALE

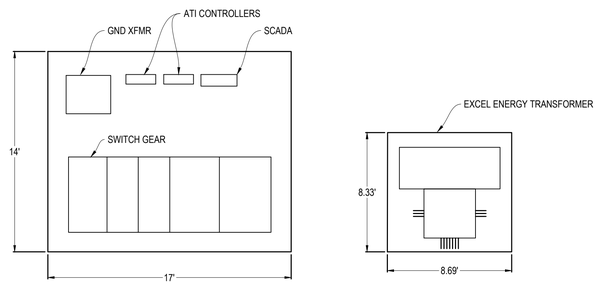

TYPICAL EQUIPMENT PAD LAYOUT

NOT TO SCALE

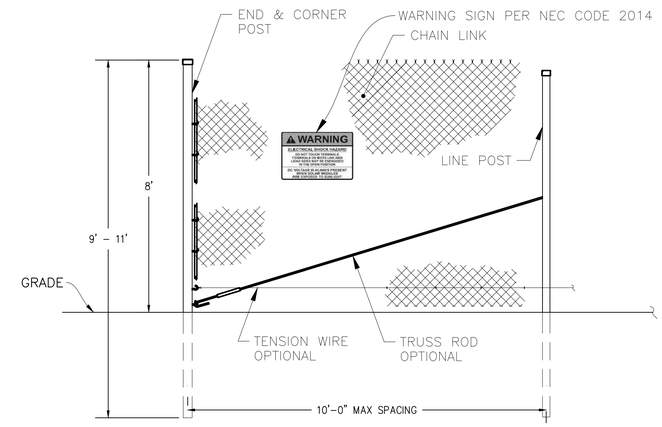

CHAIN LINK FENCE (TYP)

NOT TO SCALE

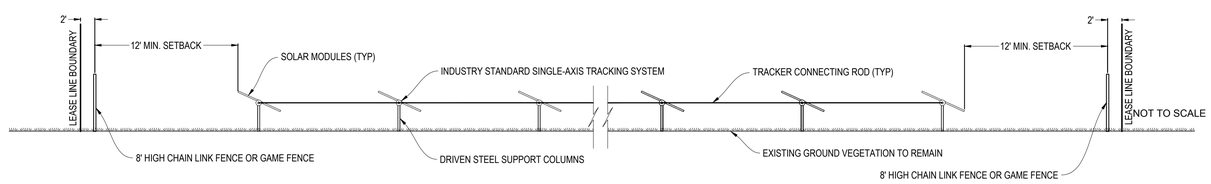

NOT TO SCALE

SOLAR GARDEN CROSS SECTION

NOT TO SCALE

NOT FOR CONSTRUCTION

NO.	DATE	REVISION	BY
DSGN	DR	CHK	APVD

PREPARED BY:

ENERTIA CONSULTING GROUP
1529 MARKET STREET, SUITE 200
DENVER, COLORADO 80202

PREPARED FOR:

Microgrid Energy
1536 WYNKOOP ST. SUITE 400
DENVER, COLORADO 80202

REUSE OF DOCUMENTS - THIS DOCUMENT, AND THE IDEAS AND DESIGNS INCORPORATED HEREIN, AS AN INSTRUMENT OF PROFESSIONAL SERVICE, IS THE PROPERTY OF ENERTIA CONSULTING GROUP AND IS NOT TO BE USED, IN WHOLE OR IN PART, FOR ANY OTHER PROJECT WITHOUT THE WRITTEN AUTHORIZATION OF ENERTIA CONSULTING GROUP.

KAMERRA 2 SOLAR GARDEN
CONDITIONAL USE PERMIT
ADAMS COUNTY, COLORADO

SITE DETAILS

VERIFY SCALE
BAR IS ONE INCH ON ORIGINAL DRAWING.
0 1"

DATE	09/12/2018
FILE	
DWG	
SHEET	6 OF 7

Q:\MICROGRID\KAMERRA - ADAMS COUNTY\07-CADD\SHEETS\LOT 2\5 SITE DETAILS.DWG

Eco-Pan Specification sheet

Eco-Pan objective
Allows for easy concrete pump washout, ready mix trucks, and other equipment associated with cement on site and easy off site recycling of the same concrete materials

Eco-Pan Application
Construction projects where concrete, stucco, mortar, grout and cement are used as a construction material or where cementitious wastewater is created.

Eco-Pan Maintenance
Inspect and clean out when ¾ full, not allowing the Eco-Pan to overflow.
Inspect wastewater level and request service, Replace with empty Eco-Pan, as needed.
Inspect Eco-Pan's to ensure that proper housekeeping are employed when washing out equipment.

Description
A self-contained and watertight eco-pan with added fork channels for portability captures and contains concrete wastewater and washout material. Our eco-pan's come in two sizes to accommodate every size pour, 1 yard /2 ton or 2.5 yard 4.5 ton.

SPECIFICATIONS
The eco-pan must be portable and temporary, watertight, equipped with fork channels and have a holding capacity to accept washout from approximately 250 yds - 2.5 yard /4.5ton, Or, 150yards-1yard /2 ton of poured concrete.

2.5 YARD / 4.5 TON

600 Gallon Capacity
20 to 30 Mixer Wash Outs*
7' x 7' x 26"

1 YARD / 2 TON

300 Gallon Capacity
10 to 15 Mixer Wash Outs*
7'x 7' x 14" (Enough to contain material from Pump Hopper)

CONCRETE WASHOUT DETAIL

NOT TO SCALE

Vehicle Tracking Control (VTC) SM-4

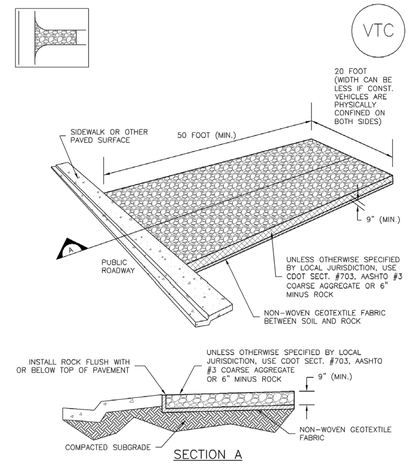

VTC-1. AGGREGATE VEHICLE TRACKING CONTROL

Silt Fence (SF) SC-1

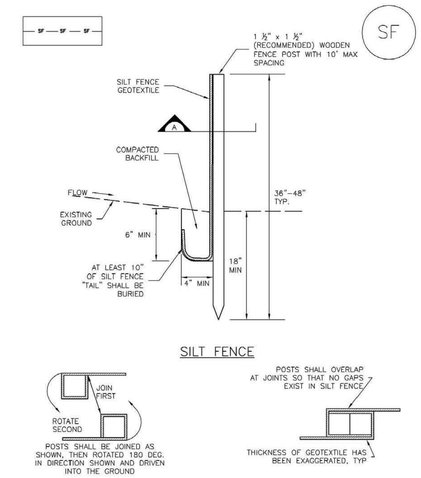

SF-1. SILT FENCE

NOT FOR CONSTRUCTION

NO.	DATE	REVISION	BY
DSGN	DR	CHK	APVD

PREPARED BY:
ENERTIA CONSULTING GROUP
1529 MARKET STREET, SUITE 200
DENVER, COLORADO 80202

PREPARED FOR:
Microgrid Energy
1536 WYNKOOP ST, SUITE 400
DENVER, COLORADO 80202

REUSE OF DOCUMENTS: THIS DOCUMENT, AND THE IDEAS AND DESIGNS INCORPORATED HEREIN, AS AN INSTRUMENT OF PROFESSIONAL SERVICE, IS THE PROPERTY OF ENERTIA CONSULTING GROUP AND IS NOT TO BE USED, IN WHOLE OR IN PART, FOR ANY OTHER PROJECT WITHOUT THE WRITTEN AUTHORIZATION OF ENERTIA CONSULTING GROUP.

KAMERRA 2 SOLAR GARDEN
CONDITIONAL USE PERMIT
ADAMS COUNTY, COLORADO

GESC DETAILS

VERIFY SCALE
BAR IS ONE INCH ON ORIGINAL DRAWING.
0 1"

DATE	09/12/2018
FILE	
DWG	
SHEET	7 OF 7

Q:\MICROGRID\KAMERRA - ADAMS COUNTY\07-CADD\SHEETS\LOT 2\6 GESC DETAILS.DWG

Community & Economic
Development Department
www.adcogov.org

ADAMS COUNTY
COLORADO

4430 South Adams County Parkway
1st Floor, Suite W2000B
Brighton, CO 80601-8218
PHONE 720.523.6800
FAX 720.523.6967

Development Review Team Comments

Date: 8/10/2018
Project Number: PRC2018-00009
Project Name: Microgrid Energy

For submission of revisions to applications, a cover letter addressing each staff review comments must be provided. The cover letter must include the following information: restate each comment that require a response and provide a response below the comment; respond to each comment with a description of the revisions and the page of the response on the site plan. And identify any additional changes made to the original document other than those required by staff.

A re-submittal is required. Please submit 1 hard copy and 1 electronic copy to the Community and Economic Development Deparmtment front desk with the re-submittal form.

An additional 20% review fee will be required after the third review and upon submittal of the fourth review.

Commenting Division: Development Services, Planning
Name of Reviewer: Emily Collins
Email: ecollins@adcogov.org

PLN1. REQUEST:

a. Rezone from Agriculture-3 to Agriculture-2.
b. Major Subdivision (Preliminary Plat) to create two lots. Proposed Lot A 12 acres and proposed Lot B 11 acres.
c. Conditional Use Permit to allow a solar facility on each of the new lots.

PLN2. SITE HISTORY/ ZONING:

a. Subject property, located at approximately NE corner of Imboden Road and E. 48th Ave. (PIN# 0181700000325, is approximately 23 acres and designated Agriculture-A (A-3).
b. According to records on file in the Adams County Assessor's Office, this parcel was created on 7-6-1998 per Bk 5387 Pg 450 and is therefore considered an illegal subdivision of land; thus requiring a subdivision plat to correct this action.
a. Site is also located in the Airport Influence Zone (AIZ) which is intended to provide areas within the County suitable for the economical development and safe operation of air carrier and/or general aviation airports for public use without adversely affecting the activities upon surrounding properties. **A signed "Aircraft Activity**

Covenant with Disclosure" must be filed prior to approval of a subdivision, if applicable, or the issuance of a building permit.

i. The site is within Restriction Area 2 which prevents construction of new residences.

PLN3. COMPREHENSIVE PLAN:

a. The site is designated as Mixed Use Employment which is intended for a range of urban-level residential uses combined with compatible and supporting uses and activities that serve the neighbrohood and are developed in harmony with the residential character of a neighborhood.

PLN5. SUBDIVISION PLAT COMMENTS:

a. Per Section 3-09-07, the minimum lot size required for the A-2 zone district is 10 acres and minimum lot width is 425 feet. **Both proposed lots exceed the minimum dimensional requirements.**
b. Per Section 5-03, the lots conform to the following design standards:
    i. Design is compatible with Comprehensive plan, zoning, and area's character
    ii. No hazardous areas or floodplain
    iii. Lot configuration is appropriate for development
    iv. Lots have access to public roads
c. **Proof of adequate water and sanitation is required (even if the proposed development does not require these services, the subdivision must be able to support future development in accordance with the regulations and zone district allowances).**
d. **A final plat application and SIA will be required after approval of the preliminary plat.**

PLN6. CONDITIONAL USE COMMENTS:

a. Minimum setbacks in A-2 include 50' front (also from Collector or Arterial ROW), 10' side, and 10' rear.
    a. Setbacks as shown on site plan conform to zone district setbacks.
b. Maximum height in A-2 is
    a. Proposed panels are a maximum of 8 ft in height at maximum tilt and conforms to the height restrictions.
c. Anticipated Conditions of Approval
    a. Expiration Date. **Please provide a proposed expiration for the solar facility.**
    b. Fire District vegetation free buffer.
    c. Installation of fencing and landscaping

PLEASE PROVIDE A RESPONSE TO THE FOLLOWING:

d. Please confirm if a solid/decorative fence is proposed along Imboden Road and chain link along all other property lines.
e. Please provide the total proposed square footage of panels on each lot (i.e. lot coverage).

f. If the intent of this application is to have a Conditional Use Permit approved for both lots (i.e. approved legal descriptions), a site plan is required for proposed development of Lot B/ Parcel 2.

Commenting Division: Development Services, Engineering:
Name of Review: Greg Labrie
Email: glabrie@adcogov.org

ENG1: Flood Insurance Rate Map – FIRM Panel # (08001C0690H), Federal Emergency Management Agency, January 20, 2016. According to the above reference, the project site is NOT located within a delineated 100-year flood hazard zone; A floodplain use permit will not be required.

ENG2: The project site is not located in a NRCO district. An environmental assessment is not required.

ENG3: The applicant shall be responsible to ensure compliance with all Federal, State, and Local water quality construction requirements. The project site is not within the County's MS4 Stormwater Permit area.The use of erosion and sediment control BMPs are expected.

ENG4: The applicant is required to submit a trip generation analysis and a preliminary drainage analysis for the proposed development of the site. The preliminary drainage analysis shall include the use of Adams County engineering standards for the full build out of the site, to provide if required, a rough estimate of the size and location of the proposed drainage facilities for the site. The analysis shall also include the proposed location of the outfall and identify any stormwater challenges that must be resolved before final construction plans are submitted.

ENG5: Prior to the issuance of any construction or building permits, the developer shall enter into a Subdivision Improvements Agreement (SIA) with the County and provide a security bond for all public improvements.

ENG6: Prior to scheduling the final plat/FDP BOCC hearing, the developer is required to submit for review and receive approval of all construction documents (construction plans and reports). Construction documents shall include, at a minimum, onsite and public improvements construction plans, drainage report, traffic impact study, and Subdivision Improvement Agreement. All construction documents must meet the requirements of the Adams County Development Standards and Regulations. The developer shall submit to the Adams County Development Review Engineering division the following: Engineering Review Application, Engineering Review Fee, two (2) copies of all construction documents. The development review fee shall be in accordance to the fee schedule found on the Adams County Website at the One Stop Customer Center Webpage.

ENG7: The developer is required to construct roadway improvements adjacent to the proposed site. Roadway improvements will consist of any roadway construction as required by the approved traffic impact study. All improvements must meet current ADA requirements.

Commenting Division: Development Services, Right-of-Way:
Name of Review: Marissa Hillje
Email: mhillje@adcogov.org

ROW1. Submit a title commitment which should be used to depict the applicable recordings on the plat. Send Adams County a copy of the title commitment with your application dated no later than 30 days to review in order to ensure that any other party's interests are not encroached upon.

ROW2. Add Easement Statement: if applicable (width will vary)

a. "Six-foot (6') wide utility easements are hereby dedicated on private property adjacent to the front lot lines of each lot in the subdivision. In addition, eight-foot (8') wide dry utility easements are hereby dedicated around the perimeter of tracts, parcels and/or open space areas. These easements are dedicated to Adams County for the benefit of the applicable utility providers for the installation, maintenance, and replacement of utilities. Utility easements shall also be granted within any access easements and private streets in the subdivision. Permanent structures, improvements, objects, buildings, wells, water meters and other objects that may interfere with the utility facilities or use thereof (Interfering Objects) shall not be permitted within said utility easements and the utility providers, as grantees, may remove any Interfering Objects at no cost to such grantees, including, without limitation, vegetation."

ROW3. Add Storm Drainage Facilities Statement:

a. "The policy of the County requires that maintenance access shall be provided to all storm drainage facilities to assure continuous operational capability of the system. The property owners shall be responsible for the maintenance of all drainage facilities including inlets, pipes, culverts, channels, ditches, hydraulic structures, and detention basins located on their land unless modified by the subdivision development agreement. Should the owner fail to maintain said facilities, the County shall have the right to enter said land for the sole purpose of operations and maintenance. All such maintenance cost will be assessed to the property owners."

ROW4. Add Stormwater operations manual if required by Engineering: Add the following language to first page of subdivision plat, "The approved stormwater operations and maintenance manual is on file with the Adams County clerk and recorders office at Reception #_____"

ROW5. Legend: Provide a legend which designates all lines and symbols except where called out on plat drawing.

ROW6. Adjacent Subdivision: Names of adjacent platted areas along with the reception and/or plat book and page number shall be shown. If unplatted, so indicate. Existing street rights of way that intersect the subdivision boundary or are adjacent to said boundary lines shall be clearly labeled with the street name, right of way width and appropriate deed or plat recording information wherein the right of way is defined. Show and label all existing lots and blocks that are immediately adjacent to the subdivision boundary.

ROW7. Monuments: All monuments used to determine and/or describe a boundary (including basis of bearings, point of beginning and point of commencement) shall be shown and clearly labeled on the plat drawing. Monuments for corners defined by the plat, or otherwise found to be missing in the field, shall be placed and set in accord with the requirements of the State of Colorado.

ROW8. Right of way dedication required for Imboden Road. This should be clearly labeled as 42ft from the east property line. This dedication should match the property to the north. All existing easements must be vacated/quitclaimed from the dedicated area.

ROW9. The first page is missing several approval blocks. – see redlines

ROW10. Edit title- see redlines

ROW11. Remove the word "proposed" from the easements shown on the plat.

ROW12. See all other redlines on plat attached.

ROW13: Address assignments can be done during the plat or access permit review. Addresses are based on the driveway/access location.

Commenting Division: Development Services, Building Safety:
Name of Review: Justin Blair
Email: jblair@adcogov.org

BSD1- No comment.

Commenting Division: Development Services, Environmental Programs:
Name of Review: Jen Rutter
Email: jrutter@adcogov.org

ENV: No comment

Commenting Division: Parks and Open Space
Name of Review: Aaron Clark
Email: aclark@adcogov.org

October 4, 2018

Emily Collins, AICP
Adams County Community and Economic Development
4430 South Adams County Parkway, Suite W2000A
Brighton, CO 80601

RE: Microgrid Energy Rezoning, Major Subdivision, & CUP/PRC2018-00009
TCHD Case No. 5052

Dear Ms. Collins,

Tri-County Health Department (TCHD) provided comments on the proposed Rezoning, Major Subdivision to create two lots on 23 acres, and Conditional Use Permit to allow for a solar garden facility at the northwest corner of E 48th Ave and Imboden Road in a letter dated July 24, 2018. The comments in that letter addressed the proposed land use of a solar garden facility. Since providing our comment letter, the applicant requested a letter speaking to whether the property could be served by an On-site Wastewater Treatment System (OWTS) for future and uses.

Proper wastewater management promotes effective and responsible water use, protects potable water from contaminants, and provides appropriate collection, treatment, and disposal of waste, which protects public health and the environment. OWTS are designed to treat domestic wastewater. Section 11.12 of TCHD's OWTS Regulation O-17 requires that OWTS which serve business, commercial, industrial or institutional property or a multifamily dwelling must receive only such biodegradable wastes for treatment and distribution as are compatible with those biological treatment processes that occur within the septic tank, any additional treatment unit and the soil treatment area. Some types of non-residential wastewater generated by some manufacturing or industrial businesses are prohibited from being disposed of into the OWTS and can significantly impact the function of the OWTS and impact nearby groundwater supplies.

TCHD has no objection to the property being served by an OWTS provided that the wastewater generated by any future land use is compatible with biological treatment processes that occur within a septic tank; that TCHD evaluates the suitability of the proposed land use for an OWTS; and the system is permitted, inspected and operated in accordance with TCHD's OWTS Regulation. More information is available at http://www.tchd.org/269/Septic-Systems.

Please feel free to contact me at (720) 200-1571 or slynch@tchd.org if you have any questions regarding TCHD's comments.

Sincerely,

Sheila Lynch
Land Use, Built Environment, and Health Program Manager

cc: Mike Weakley, Dylan Garrison, TCHD

July 24, 2018

Emily Collins, AICP
Adams County Community and Economic Development
4430 South Adams County Parkway, Suite W2000A
Brighton, CO 80601

RE: Microgrid Energy Rezoning, Major Subdivision, & CUP/PRC2018-00009
TCHD Case No. 5052

Dear Ms. Collins,

Thank you for the opportunity to review and comment on the Rezoning, Major Subdivision to create two lots on 23 acres, and Conditional Use Permit to allow for a solar garden facility at the northwest corner of E 48th Ave and Imboden Rd. Tri-County Health Department (TCHD) staff has reviewed the application for compliance with applicable environmental and public health regulations and principles of healthy community design. After reviewing the application, TCHD has the following comments.

Renewable Energy
Alternative energy supplies generally do not contribute to air and water pollution and can have a positive impact on the environment. TCHD commends the applicant for bringing forward a proposal that promotes the use of renewable energy.

Wastewater for Construction Sites
Sewage has the potential to carry illness-causing organisms and must be handled properly to avoid spreading disease. The application does not specify how wastewater services will be provided during the construction for onsite employees. We anticipate that portable toilets will be necessary during construction. TCHD has no objection to the use of portable toilets, provided the units are properly cleaned and maintained. While TCHD cannot require the use of hand sinks, we recommend that the applicant provide those for the workers, as it will reduce the potential for the transmission of disease.

Solid Waste
Rodents, such as mice and rats, carry diseases which can be spread to humans through contact with rodents, rodent feces, urine, or saliva, or through rodent bites. The applicant does not state what method they will be using to remove solid waste from the site during construction. As rodents are attracted to trash, TCHD strongly recommends that all trash is enclosed in rodent proof receptacles and is regularly collected and disposed of at an approved landfill.

Please feel free to contact me at (720)200-1537 or mbettag@tchd.org if you have any questions on TCHD's comments.

Sincerely,

Mallory R. Bettag, MPH/MURP
Land Use and Built Environment Specialist III

cc: Sheila Lynch, Dylan Garrison, TCHD

COLORADO
Parks and Wildlife
Department of Natural Resources

Northeast Regional Office
6060 Broadway
Denver, CO 80216
P 303.291.7227 | F 303.291.7114

July 24, 2018

Emily Collins
Adams County
Community and Economic Development Department
4430 South Adams County Parkway, Suite W2000A
Brighton, CO 80601-8216

RE: Conditional use permit to allow a solar garden facility (major energy facility) on the property (Case Number: PRC2018-00009)

Dear Ms. Collins:

Thank you for the opportunity to comment on the Microgrid Energy conditional use permit. The mission of Colorado Parks and Wildlife (CPW) is to perpetuate the wildlife resources of the state, to provide a quality state parks system, and to provide enjoyable and sustainable outdoor recreation opportunities that educate and inspire current and future generations to serve as active stewards of Colorado's natural resources. Our goal in responding to land use proposals such as this is to provide complete, consistent, and timely information to all entities who request comment on matters within our statutory authority.

The proposed 23-acre Microgrid Energy Solar facility is located at the northwest corner of East 48th Avenue and Imboden Road, Aurora, Colorado (parcel number 0181700000325). The property listed on the conditional use permit is proposed to be rezoned in the Agriculture-2 zone district. The proposed solar garden facility is surrounded by agricultural lands and an existing solar array immediately north of the subject parcel.

District Wildlife Manager Serena Rocksund recently analyzed this amendment to the site. The main impacts to wildlife from this development include fragmentation and loss of habitat. Fragmentation of wildlife habitat has been shown to impede the movement of wildlife across the landscape. Open space areas are more beneficial to wildlife if they connect to other natural areas. The areas of wildlife habitat that most closely border human development show heavier impact than do areas on the interior of the open space. However, when open space areas are smaller in size, the overall impact of the fragmentation is greater (Odell and Knight, 2001). By keeping open space areas contiguous and of larger size the overall benefit to wildlife increases dramatically.

CPW would expect a variety of wildlife species to utilize this site on a regular basis, most notably, small to mid-sized mammals, song birds, and raptors. The potential also exists for large mammals such as deer and pronghorn to frequent this site. Raptors and other migratory birds, such as most song birds, are protected from take, harassment, and nest disruption at both the state and federal levels. If an active nest is discovered within the development area,

Bob D. Broscheid, Director, Colorado Parks and Wildlife • Parks and Wildlife Commission: Robert W. Bray • Marie Haskett • Carrie Besnette Hauser
John Howard, Chair • Marvin McDaniel • Dale Pizel • James Vigil, Secretary • Dean Wingfield • Michelle Zimmerman, Vice-Chair • Alex Zipp

CPW recommends that buffer zones around nest sites be implemented during any period of activity that may interfere with nesting season. This will prevent the intentional or unintentional destruction of an active nest.

If initial site disturbance is proposed to occur between February 15 and August 31, CPW recommends surveys for tree, shrub, and ground nesting raptors and songbirds. If an active nest is observed, a minimum of a 150-ft buffer (unless otherwise indicated in the "Recommended Buffer Zones and Season Restrictions for Colorado Raptors" document) should be maintained until the young are no longer dependent on the nest.

For further information on this topic, a copy of the document, "Recommended Buffer Zones and Seasonal Restrictions for Colorado Raptors," is available from your local District Wildlife Manager. Following the recommendations outlined in this document will decrease the likelihood of unintentional take through disturbance.

If a prairie dog colony is discovered within the project area, the potential may also exist for the presence of burrowing owls. Burrowing owls live on flat, treeless land with short vegetation, and nest underground in burrows dug by prairie dogs, badgers, and foxes. These raptors are classified as a state threatened species and are protected by both state and federal laws, including the Migratory Bird Treaty Act. These laws prohibit the killing of burrowing owls or disturbance of their nests. Therefore, if any earth-moving will begin between March 15th and October 31st, a burrowing owl survey should be performed. Guidelines for performing a burrowing owl survey can also be obtained from your local District Wildlife Manager.

If prairie dog colonies are present, CPW would recommend they either be captured alive and moved to another location or humanely euthanized before any earth-moving occurs. Be aware that a permit and approval from county commissioners may be required for live relocation.

CPW recommends consideration be made for using principles of an integrated weed management plan, which Adams County may already have in place, to control and eliminate the spread of any noxious weeds in and around the site. CPW recommends that the planting of any species listed as noxious weeds be avoided throughout the development site and surrounding area. The spread and control of noxious weeds on the sites is a concern for wildlife in the immediate and surrounding area. Weeds are defined as "a plant that interferes with management objectives for a given area of land at a given point in time" (Whitson, 1999). Invasive plants endanger the ecosystem by disturbing natural processes and jeopardizing the survival of native plants and the wildlife that depend on them. The threat is so severe in the United States that scientist now agree that the spread of invasive species is one of the greatest risks to biodiversity (Nature Conservancy, 2003).

CPW recommend a smooth top to the fence (e.g., no top barbed wire or exposed metal rods) to prevent wildlife from impaling themselves if they attempt to cross into the solar facility. CPW has developed a document that helps project proponents choose the correct type of fencing allow or restrict wildlife movement. In this case, the 8-ft fence with barbless wire apron on extension arms angled outward at 45º would be preferable to exclude wildlife from the solar garden facility.

CPW also requests that the solar garden facility is checked at least every few days, in the unlikely event that a deer or other wildlife become trapped in the facility, and can be released.

Thank you again for the opportunity to comment on the conditional use permit for the Microgrid Energy Solar Garden Facility in Adams County. Please do not hesitate to contact us again about ways to continue managing the facility in order to maximize wildlife value while minimizing potential conflicts. If you have any further questions, please contact District Wildlife Manager Serena Rocksund at (303) 291-7132 or serena.rocksund@state.co.us.

Sincerely,

Crystal Chick

Crystal Chick
Area 5 Wildlife Manager

Cc: M. Leslie, T. Kroening, S. Rocksund

Right of Way & Permits
1123 West 3rd Avenue
Denver, Colorado 80223
Telephone: **303.571.3306**
Facsimile: 303. 571.3284
donna.l.george@xcelenergy.com

August 1, 2018

Adams County Community and Economic Development Department
4430 South Adams County Parkway, 3rd Floor, Suite W3000
Brighton, CO 80601

Attn: Emily Collins

Re: Microgrid Energy, Case # PRC2018-00009

Public Service Company of Colorado's (PSCo) Right of Way & Permits Referral Desk has reviewed the documentation for **Microgrid Energy** and has **no apparent conflict**.

Please be aware PSCo owns and operates existing natural gas and electric distribution facilities along Imboden Road. Public Service Company has no objection to this proposed rezone, contingent upon Public Service Company of Colorado's ability to maintain all existing rights and this amendment should not hinder our ability for future expansion, including all present and any future accommodations for natural gas transmission and electric transmission related facilities.

Should the project require any new electric service or modification to existing facilities, the property owner/developer/contractor must complete the **application process** via FastApp-Fax-Email-USPS (go to: https://www.xcelenergy.com/start_stop_transfer/new_construction_service_activation_for_builders). It is then the responsibility of the developer to contact the Designer assigned to the project for approval of design details. Additional easements may need to be acquired by separate document for new facilities.

As a safety precaution, PSCo would like to remind the developer to call the **Utility Notification Center** at 1-800-922-1987 to have all utilities located prior to any construction.

Please contact me at donna.l.george@xcelenergy.com or 303-571-3306 if there are any questions with this referral response.

Donna George
Right of Way and Permits
Public Service Company of Colorado

Community & Economic
Development Department
www.adcogov.org

ADAMS COUNTY
COLORADO

4430 South Adams County Parkway
1st Floor, Suite W2000B
Brighton, CO 80601-8218
PHONE 720.523.6800
FAX 720.523.6967

Request for Comments

Case Name:	Microgrid Energy
Case Number:	PRC2018-00009

July 11, 2018

Adams County Planning Commission is requesting comments on the following request:

1) **Rezoning from Agriculture-3 (A-3) to Agriculture-2 (A-2); 2) Major Subdivision to create two lots on approximately 23 acres; 3) Conditional Use Permit to allow a solar garden facility (major energy facility) on the property.**

The Assessor's Parcel Numbers is **0181700000325**
Applicant Information **MICROGRID ENERGY (JON FITZPATRICK)**
1536 WYNKOOP ST, Suite 400
DENVER, CO 80202

Please forward any written comments on this application to the Department of Community and Economic Development at 4430 South Adams County Parkway, Suite W2000A Brighton, CO 80601-8216. (720) 523-6820 by **August 1, 2018** in order that your comments may be taken into consideration in the review of this case. If you would like your comments included verbatim please send your response by way of e-mail to ECollins@adcogov.org.

Once comments have been received and the staff report written, the staff report and notice of public hearing dates will be forwarded to you for your information. The full text of the proposed request and additional colored maps can be obtained by contacting this office or by accessing the Adams County web site at www.adcogov.org/planning/currentcases.

Thank you for your review of this case.

Emily Collins

Emily Collins, AICP
Case Manager

BOARD OF COUNTY COMMISSIONERS

Eva J. Henry
DISTRICT 1

Charles "Chaz" Tedesco
DISTRICT 2

Erik Hansen
DISTRICT 3

Steve O'Dorisio
DISTRICT 4

Mary Hodge
DISTRICT 5

Community & Economic
Development Department
Development Services Division
www.adcogov.org

ADAMS COUNTY
COLORADO

4430 South Adams County Parkway
1st Floor, Suite W2000B
Brighton, CO 80601-8218
PHONE 720.523.6800
FAX 720.523.6967

Public Hearing Notification

Case Name:	Pivot-Kamerra Solar Conditional Use
Case Number:	RCU2018-00027
Planning Commission Hearing Date:	Thursday, April 25, 2019 at 6:00 pm
Board of County Commissioners Hearing Date:	Tuesday, May 21, 2019 at 9:30 am

March 28, 2019

A public hearing has been set by the Adams County Planning Commission and the Board of County Commissioners to consider the following request: **Conditional Use Permit to allow a solar energy facility in the Agricultural-2 zone district.** The proposed use will be solar energy facility. This request is located at approximately 500 feet northwest of the intersection of East 48th Avenue and Imboden Road. The Assessor's Parcel Number is 0181700000325. The legal description of the property is:

Sect,Twn,Rng:18-3-64 Desc: Pt Of The S2 Of Sec 18 Desc As Fols Beg At The Se Cor Of Sec 18 Th N 30 Ft Th N 89d 30m 07s W 30 Ft Th Cont N 89d 30m 07s W 1755/36 Ft Th N 00d 17m 44s W 868/72 Ft Th S 89d 29m 44s E 1755/37 Ft Th S 00d 17m 44s E 868/53 Ft To The Pob Exc Parc 23/0070a

Applicant Information: Pivot Energy
Jon Fitzpatrick
1536 Wynkoop St., #400
Denver, CO 80202

The hearing will be held in the Adams County Hearing Room located at 4430 South Adams County Parkway, Brighton CO 80601-8216. This will be a public hearing and any interested parties may attend and be heard. The Applicant and Representative's presence at these hearings is requested. If you require any special accommodations (e.g., wheelchair accessibility, an interpreter for the hearing impaired, etc.) please contact the Adams County Community and Economic Development Department at (720) 523-6800 (or if this is a long distance call, please use the County's toll free telephone number at 1-800-824-7842) prior to the meeting date.

For further information regarding this case, please contact the Community and Economic Development Department, 4430 S Adams County Parkway, Brighton, CO 80601, 720-523-6800. This is also the location where maps and/or text certified by the Planning Commission may be viewed.

The full text of the proposed request and additional colored maps can be obtained by contacting this office or by accessing the Adams County web site at www.adcogov.org/planning/currentcases.

Greg Barnes
Planner II

BOARD OF COUNTY COMMISSIONERS

Eva J. Henry — District 1
Charles "Chaz" Tedesco — District 2
Emma Pinter — District 3
Steve O'Dorisio — District 4
Mary Hodge — District 5

PUBLICATION REQUEST

Pivot-Kamerra Solar Conditional Use
Case Number: RCU2018-00027

Planning Commission Hearing Date:	Thursday, April 25, 2019 at 6:00 pm
Board of County Commissioners Hearing Date:	Tuesday, May 21, 2019 at 9:30 am

Request: Conditional Use Permit to allow a solar energy facility in the Agricultural-2 zone district

Location:	**Approx. 4900 Imboden Rd**
Parcel Number:	**0181700000325**
Case Manager:	**Greg Barnes**
Applicant:	**Jon Fitzpatrick** **1536 Wynkoop St, #400** **Denver, CO 80202**
Owner:	**Kamerra LLC** **1250 S Buckley Rd, #I-246** **Aurora, CO 80017**

Legal Description:
Sect,Twn,Rng:18-3-64 Desc: Pt Of The S2 Of Sec 18 Desc As Fols Beg At The Se Cor Of Sec 18 Th N 30 Ft Th N 89d 30m 07s W 30 Ft Th Cont N 89d 30m 07s W 1755/36 Ft Th N 00d 17m 44s W 868/72 Ft Th S 89d 29m 44s E 1755/37 Ft Th S 00d 17m 44s E 868/53 Ft To The Pob Exc Parc 23/0070a

Adams County
Attn: Planning Addressing
PLN

Adams County Construction Inspection
Attn: PWCI .
PWCI

Adams County Development Services - Building
Attn: Justin Blair
4430 S Adams County Pkwy
Brighton CO 80601

Adams County Treasurer: Send email
Attn: Adams County Treasurer
bgrimm@adcogov.org

BENNETT FIRE DISTRICT #7
Attn: Captain Caleb J Connor
825 SHARIS CT
BENNETT CO 80102

BENNETT FIRE DISTRICT #7
Attn: CHIEF EARL CUMELY
825 SHARIS CT
BENNETT CO 80102

BENNETT PARK AND RECREATION
Attn: Chris Raines
PO BOX 379
455 S. 1ST ST.
BENNETT CO 80102-0379

BENNETT SCHOOL DISTRICT 29J
Attn: Robin Purdy
615 7TH ST.
BENNETT CO 80102

Century Link, Inc
Attn: Brandyn Wiedreich
5325 Zuni St, Rm 728
Denver CO 80221

CITY OF AURORA - WATER AND SAN. DEPT.
Attn: PETER BINNEY
15151 E ALAMEDA PKWY #3600
AURORA CO 80012

CITY OF AURORA ATTN: PLANNING DEPARTMENT
Attn: Porter Ingrum
15151 E ALAMEDA PKWY 2ND FLOOR
AURORA CO 80012

Code Compliance Supervisor
Attn: Eric Guenther
eguenther@adcogov.org

COLO DIV OF WATER RESOURCES
Attn: Joanna Williams
OFFICE OF STATE ENGINEER
1313 SHERMAN ST., ROOM 818
DENVER CO 80203

COLO DIV OF WATER RESOURCES
Attn: Joanna Williams
OFFICE OF STATE ENGINEER
1313 SHERMAN ST., ROOM 818
DENVER CO 80203

COLORADO DIVISION OF WILDLIFE
Attn: Eliza Hunholz
Northeast Regional Engineer
6060 BROADWAY
DENVER CO 80216-1000

COLORADO DIVISION OF WILDLIFE
Attn: Serena Rocksund
6060 BROADWAY
DENVER CO 80216

COLORADO GEOLOGICAL SURVEY
Attn: Jill Carlson
1500 Illinois Street
Golden CO 80401

Colorado Geological Survey: CGS_LUR@mines.edu
Attn: Jill Carlson
Mail CHECK to Jill Carlson

COMCAST
Attn: JOE LOWE
8490 N UMITILLA ST
FEDERAL HEIGHTS CO 80260

COUNTY ATTORNEY- Email
Attn: Christine Francescani
CFrancescani@adcogov.org

Engineering Department - ROW
Attn: Transportation Department
PWE - ROW

Engineering Division
Attn: Transportation Department
PWE

METRO WASTEWATER RECLAMATION
Attn: CRAIG SIMMONDS
6450 YORK ST.
DENVER CO 80229

NS - Code Compliance
Attn: Gail Moon
gmoon@adcogov.org

Parks and Open Space Department
Attn: Nathan Mosley
mpedrucci@adcogov.org
aclark@adcogov.org

SHERIFF'S OFFICE: SO-HQ
Attn: MICHAEL McINTOSH
nblair@adcogov.org, aoverton@adcogov.org; mkaiser@adcog
snielson@adcogov.org

Sheriff's Office: SO-SUB
Attn: SCOTT MILLER
TFuller@adcogov.org, smiller@adcogov.org
aoverton@adcogov.org; mkaiser@adcogov.org

TRI-COUNTY HEALTH DEPARTMENT
Attn: Sheila Lynch
6162 S WILLOW DR, SUITE 100
GREENWOOD VILLAGE CO 80111

TRI-COUNTY HEALTH DEPARTMENT
Attn: MONTE DEATRICH
4201 E. 72ND AVENUE SUITE D
COMMERCE CITY CO 80022

Tri-County Health: Mail CHECK to Sheila Lynch
Attn: Tri-County Health
landuse@tchd.org

UNITED STATES POST OFFICE
Attn: MARY C. DOBYNS
56691 E COLFAX AVENUE
STRASBURG CO 80136-8115

Xcel Energy
Attn: Donna George
1123 W 3rd Ave
DENVER CO 80223

Xcel Energy
Attn: Donna George
1123 W 3rd Ave
DENVER CO 80223

CITY OF AURORA
15151 E ALAMEDA PKWY 3RD FLOOR
AURORA CO 80012

CURRENT RESIDENT
34195 E 48TH AVE
WATKINS CO 80137-7126

CO LAND ACQUISITIONS LLC
1551 BANNOCK ST
DENVER CO 80204

COLORADO SHARED SOLAR I LLC
211 CARNEGIE CTR
PRINCETON NJ 08540-6213

CONOCOPHILLIPS COMPANY
C/O CONOCOPHILLIPS COMPANY PROPERTY TAX DEPT
MIDLAND TX 79705

KAMERRA LLC
1250 S BUCKLEY RD UNIT I-246
AURORA CO 80017-4150

METHVEN MARIANNE
3405 PECAN PARK DR
FLOWER MOUND TX 75022

PARK JE KYUNG
1557 PEORIA ST
AURORA CO 80010-2829

PUBLIC SERVICE CO OF COLORADO
C/O PROPERTY AND LOCAL TAXES
PO BOX 1979
DENVER CO 80201-1979

ROBSON RYAN E
1863 ASOKA ST
STRASBURG CO 80136-7708

WESTERN TRANSPORT LLC
625 E MAIN ST STE 102B-303
ASPEN CO 81611-2153

CERTIFICATE OF POSTING

I, J. Gregory Barnes do hereby certify that I posted the property at approximately 500 feet northwest of the intersection of East 48th Avenue and Imboden Road on April 9, 2019 in accordance with the requirements of the Adams County Development Standards and Regulations.

J. Gregory Barnes